Form 2697 Revised

THE MILWAUKEE ROAD

CHICAGO, MILWAUKEE, ST. PAUL AND PACIFIC RAILROAD COMPANY

RULES AND INSTRUCTIONS GOVERNING OPERATION AND MAINTENANCE OF AIR BRAKES AIR SIGNALS LOCOTROL

Effective September 1, 1974

CHICAGO, MILWAUKEE, ST. PAUL AND PACIFIC

RAILROAD COMPANY

Rules and Instructions
Governing
Operation and Maintenance of
AIR BRAKES
AIR SIGNALS
LOCOTROL

Effective September 1, 1974

The Rules and Instructions set forth herein govern the employees of The Chicago, Milwaukee, St. Paul and Pacific Railroad Company and affiliated Lines taking effect and superseding all previous Rules and Instructions inconsistant therewith.

Changes in these rules and instructions may be issued by proper authority.

D.O. BURKE
General Manager Eastern District

Q.W. TORPIN
General Manager Western District

F.A. UPTON
Asst. Vice President–Mechanical

Approved **F.G. McGINN**
Vice President Operation

Table of Contents

INDEX

Rule No.

–A–

–B–

–C–

–D–

–E–

–F–

–G–

–H–

–I–

–L–

–M–

–O–

–P–

–Q–

–R–

–S–

–T–

–U–

–V–

–X–

–Y–

GENERAL NOTICE

Employees of Mechanical Departments, Enginemen, Trainmen, Yardmen and other employees whose duties may require a knowledge of the operation or maintenance of air brakes, air signals and Locotrol must familiarize themselves with the rules and instructions contained herein.

They must provide themselves with a copy of these rules and instructions and be prepared to pass a satisfactory examination upon them when required.

Any violations of these rules or instructions must be reported promptly to the proper authority.

DEFINITIONS

AB VALVES – The operating device used on freight cars for charging, applying and releasing the air brakes according to the varying pressures in the brake pipe.

AIR BRAKE – A combination of parts operated by compressed air and controlled manually, pneumatically or electrically, by means of which the motion of a car or engine is retarded or stopped.

AIR COMPRESSOR – A mechanical device used to compress air for operating the air brake, air signal and other air operated appliances on engines or cars.

AIR GAUGES – Duplex and single pointer gauges used on engines and cabooses to indicate the amount of air pressure being maintained.

AUTOMATIC AIR BRAKE – An arrangement of equipment on engines and cars with necessary piping and reservoirs for its operation, which upon a reduction of brake pipe pressure, regardless of how made, will automatically apply the brakes. An increase of brake pipe pressure will cause a release.

AUTOMATIC BRAKE VALVE – A valve, manually operated primarily to control the flow of air into and out of the brake pipe. This provides a means for the engineer to control the rate (service or emergency) of brake pipe reduction and the air supply (main reservoir or feed valve) into the brake pipe for charging, recharging and releasing the brakes on both engines and attached cars.

AUTOMATIC DRAIN VALVE – A valve which automatically drains condensation from reservoirs.

AUTOMATIC SLACK ADJUSTER – A device that functions to take up the slack resulting from wear of the brake shoes and other parts and maintain the travel of the brake cylinder piston at a constant predetermined amount.

BACK UP VALVE – A brake valve provided for the purpose of applying the brakes from the leading end of a car when it is necessary to push or back train or cars.

BRAKE APPLICATION – A sufficient reduction of brake pipe pressure (no matter how made) to cause the triple and control valves, or distributing valve to move to applied position which, if made in the service position of the automatic brake valve, may consist of one or more reductions.

BRAKE PIPE – The pipe, including branch pipe, angle cocks, or brake end cocks, cut-out cocks, centrifugal dirt collectors, strainers, hose and hose couplings, used to distribute compressed air throughout the train. The brake pipe connects the automatic brake valve on the engine with the brake apparatus on all the cars in the train.

BRAKE PIPE VENT VALVE – A valve used to provide means of insuring propagation of quick action when an emergency application of the brake is initiated. The Vent Valve is built into the emergency portion of the D-24, D-22, U-12 and AB control valves.

BRAKE CYLINDER RELEASE VALVE – A valve designed, and added to standard AB brake equipment, to bleed brake cylinder pressure without necessity of draining car reservoirs when preparing cars for switching.

COMMUNICATING SIGNAL VALVE – A valve which operates to cause the communicating signal whistle to give audible sounds in the engine cab.

COMPRESSOR GOVERNOR – A valve to automatically control air compressor operation when the pressure in the main reservoirs reaches a minimum and fixed maximum.

CABOOSE VALVE – A valve placed in the caboose for applying brakes from the rear, when necessary, at a service or emergency rate of reduction.

CHECK VALVE – A self closing valve so arranged that it permits the free flow of air in one direction while preventing a similar flow in the opposite.

CLASP BRAKE – An application of brakes in which two brake shoes are used on each wheel, and opposite to each other, instead of one brake shoe per wheel.

DISTRIBUTING OR CONTROL VALVE – A valve on the engine which applies and releases the brakes on the engine directly and through relay valves, and automatically maintains the pressure against leakage in the brake cylinders during brake applications.

DUPLEX RELEASE VALVE – An appliance permitting manual reduction or depletion of auxiliary reservoir pressure alone, or auxiliary and emergency reservoir together.

DOUBLE HEADING COCK – (Sometimes referred to as Brake Valve Cut-Out Cock) A cut-out cock provided to cut out the automatic brake valve on all except the leading engine, or engine unit when two or more engines, or engine units, are in the same train.

DIRECT RELEASE – An operating position of the graduated release cap on control valves which, when positioned for direct release, provides for complete release of brake cylinder pressure in one step.

DEAD ENGINE FEATURE – Provision made on engines for charging main reservoirs from the brake pipe when the engine is dead or the compressor is inoperative.

EMERGENCY VALVE – Placed in all passenger carrying cars, baggage and mail cars, diesel engine cabs, diesel "B" units and on some work equipment cars and cranes for the purpose of applying the brakes in emergency.

EMERGENCY APPLICATION – A quick heavy reduction of brake pipe pressure which will cause the triple and control valves to move to emergency position and transmit quick action. It may be made by the engineer with the automatic brake valve, or by the trainmen with the caboose valve, emergency valve, back-up valve or angle cock, for the purpose of preventing injury, loss of life, or property damage; it is also made automatically when the brake pipe is broken or the train parts.

EMERGENCY RELAY VALVE – A valve that makes it possible to obtain an emergency brake application at any time when the brake system is charged, irrespective of the position of the double heading cock.

FEED VALVE – A valve that reduces main reservoir pressure to the pressure desired in the brake pipe, maintaining that pressure automatically while the brake valve handle is in RUNNING position.

FULL SERVICE APPLICATION – A service reduction of brake pipe pressure sufficient in amount to cause equalization of pressure in brake cylinder with pressure in the reservoir from which compressed air is supplied to brake cylinder.

GRADIENT – The difference in pounds pressure per square inch between brake pipe pressure on the engine and maximum obtainable on the rear of the train. It is the direct result of leakage or train line obstruction.

GRADUATED RELEASE – A feature in certain control valves which makes it possible to graduate brake cylinder pressure down in steps.

INDEPENDENT BRAKE VALVE – A valve to operate the air brakes on the engine independently of the train brakes.

INTERCOOLERS – A radiating means of cooling compressed air between stages of compression.

LOCOTROL OPERATION – Is a radio controlled remote engine operation.

MAIN RESERVOIRS – Cylindrical receptacles on the engine for storing and cooling the main supply of compressed air.

MANUAL SLACK ADJUSTER – A device for adjusting piston travel – manually operated.

ORIFICE – A specific sized opening through which air may flow.

QUICK SERVICE VALVE – A valve which propagates quick service by making a brake pipe reduction on each car so equipped.

REDUCING VALVES – Valves that reduce main reservoir pressure to the pressure desired and automatically maintain it for use where lower air pressures are required.

RELAY VALVES – Valves used on engines or cars which are equipped with a large number of brake cylinders. They relay the application and release operation of the distributing or control valve and provide direct flow of main or supply reservoir air to the brake cylinders under control of the distributing or control valve.

RELAY AIR VALVES – Valves, when actuated, operate to perform their various functions of applying the brakes or stopping the flow of air pressure to the brake pipe or cutting off the engine power, depending upon the number and type of valves used.

RETAINING VALVE – A valve by means of which a portion of the pressure in the brake cylinder may be retained to aid in retarding the acceleration of a train in descending long grades. This permits the brake pipe pressure to be increased (after brake applications) to recharge the auxiliary reservoirs.

ROTAIR VALVE – A valve used to condition certain functions of the equipment for operation of the engine in freight or passenger service, or as a leading or trailing unit in multiple unit operation.

SAFETY VALVE – A valve designed to open at a predetermined pressure setting, thus preventing an accumulation of pressure in excess of prescribed values.

SERVICE APPLICATION – A reduction of brake pipe pressure at a rate that will produce an application of the engine and train brakes. A service application may consist of one or more service reductions.

SERVICE RATE OF REDUCTION – A decrease inbrake pipe pressure at a rate sufficiently rapid to move the operating valve on engines and cars to service position, but at a rate not rapid enough to move the valve to emergency position.

TRIPLE AND CONTROL VALVES – Valves which charge the reservoirs on engines and cars, apply and release the brakes.

GENERAL RULES

1.—Air pressure regulating devices must be adjusted for the following pounds per square inch (PSI):

(a)
1. Main reservoir electric and diesel engines and cab control cars
   - Minimum ..... 130 PSI
   - Maximum ..... 140 PSI
2. Main reservoir safety valve ..... 150 PSI
3. Air compressor discharge pipe safety valve ..... 175 PSI
4. Air compressor intercooler safety valve ..... 60 PSI
5. Minimum differential between brake pipe and main reservoir air pressure with brake valve in running or release position ..... 15 PSI
6. Safety valve for control or distributing valve .. 30 to 68 PSI
7. Reducing valve for independent or straight air brake 30 to 50 PSI
8. Self-lapping portion for independent air brake (full application pressure) ..... 30 to 72 PSI
9. Reducing valve for air signal ..... 40 to 60 PSI
10. Control air pressure ..... 90 PSI
11. Parking brake on cab control cars ..... 90 PSI
12. Dead engine feature reducing valve ..... 25 PSI

(b) **Standard Brake Pipe Pressures**

1. Inter-City (Amtrak) trains ..... 110 PSI
2. Suburban passenger trains ..... 90 PSI
3. Freight Trains ..... 80 PSI
4. Freight Trains on mountain grade ..... 90 PSI
5. Switching Inter-City (Amtrak) trains ..... 100 PSI
6. Switching suburban passenger trains ..... 90 PSI
7. Switching freight trains ..... 65 PSI
8. Transfer movements ..... 80 PSI
9. Switch engines ..... 65 PSI

2.—The following pressure will be applicable where the term "Full Service:: brake pipe reduction is hereinafter referred to:

Brake Pipe Pressure	Full Service Reduction	Brake Cyl. Pressure & Reservoir Equalization
(PSI)	(PSI)	(PSI)
80	23	57
90	26	64
110	32	78

3.—Employees must know that air brake equipment on engines is in a safe and suitable condition for service before any movement is made.

4.—Compressor governor on an engine must operate to stop and start the air compressor within 5 pounds above or below the pressure fixed.

5.–Engineer and Conductor must report any irregularity of air gauges on the prescribed form.

6.–The date of testing or cleaning of engine air brake equipment and the initials of the shop or station at which the work is done must be placed on a card displayed under transparent covering in the cab of the engine and in each engine unit before it is placed in or accepted for service. Engineer, upon taking charge of engine, will note that this card is in place.

7.–**Brake Pipe Leakage Engine**: Brake pipe leakage must not exceed 5 pounds per minute after a reduction of 10 pounds has been made from brake pipe pressure of not less than 70 pounds.

8.–Minimum brake cylinder piston travel must be sufficient to provide proper brake shoe clearance when brakes are released.

Maximum brake cylinder piston travel when engine is standing must not exceed the following:

	Inches
Driving Wheel brake	6
Swivel type truck brake with brakes on more than one truck operated by one brake cylinder	7
Swivel type truck brake equipped with one brake cylinder	8
Swivel type truck brake equipped with two or more brake cylinders	6

9.–Engineer will inspect for and report defects in foundation brake rigging on arrival at the terminal.

10.–The engineer and conductor, when taking charge of engine or train in passenger service, must know the air signal communicating system is in proper condition for service if engine is so equipped.

11.–At points where mechanical forces are not employed and engine is to be shut down, place and leave automatic brake valve in SERVICE position until brake pipe pressure is reduced to zero. After wheels have been blocked, main reservoir drain cocks, automatic drain valves, and filter drain cocks must then be manually opened and left open until compressors have again been started and condensate worked out.

Water and foreign matter must be drained from all reservoirs, intercoolers, aftercoolers, air filters, dirt collectors, and all other parts of the equipment provided with drains before starting each trip or days work.

12.–Engines must have the air brake system charged to 100 lbs. air pressure and brake equipment properly positioned before movement is started. Engine brakes must be applied and released prior to movement to determine that brake cylinder pistons are operating and that brake cylinder lines to trucks are not cut out. Hand brakes must be released on all units before engine is moved.

13.–The proper whistle signals must be given to indicate direction of movement and the engine bell ringing to warn of movement. It must be known that the way is clear before beginning any movement.

14.–Movements on or off turntable must not be made until it is known that the table is properly lined and locked and then only after a signal has been received from the table operator or helper. Movement will be made on or off the turntable at a safe speed and be governed by the conditions at the time of movement.

15.–Movements within the Roundhouse or Shop area must not exceed a speed of 5 MPH and utmost care must be used to provide a safe movement.

16.–The following instructions will govern when engines are left unattended and idling:

(a) The independent brake must be applied in full application position.

(b) Handbrake set and wheels blocked.

(c) On engines equipped with removable reverser handle, it must be pulled out of control stand and set aside.

(d) The engine run and generator field switch must be in the "OFF" position.

(e) Fairbanks Morse switcher engines equipped with reverser and throttle incorporated into one – it must be placed in neutral position and locked.

(f) On all engines equipped with safety control (deadman), this deadman safety control must be cut in at all times.

(g) On all engines a full brake pipe reduction must be made, the automatic brake valve placed in lap or handle off position and handle removed if practical. Except on 24RL brake equipment the handle will be left in lap position.

(h) When necessary to leave engines unattended (outside of Diesel House area), all cab windows and doors must be closed and locked against illegal entry by unauthorized persons. Switch locks and hasps are provided for this purpose on all engines regularly assigned to outlying points – all other engines are provided with coach key type of locks.

17.–When engines are in through service the engineer or conductor must know that no part of the foundation brake rigging and safety supports shall be less than 2½" above the rail, and no wheels have flat spots of 2½" or more.

18.–At points where mechanical forces are employed, the Mechanical Department will be responsible for knowing when an engine is sent out for service, that it is in good working order and is adequately supplied with fuel, water, sand and other supplies including flagging equipment and signal appliances. Engineers will not be required to make inspection of engine at such points, except it must be known that adequate air pressure is being maintained and that air brake equipment is functioning properly. Hand brakes must be released on all units before engine is moved.

19.–Air brake system on engine must be drained enroute when practicable.

20.–The independent brake valve settings for brake cylinder pressure are as follows' Adjustments must not be made without proper authority:

(a) Freight, road and switcher diesel engines.
- Cast Iron Shoes ..... 35 lbs.
- High Friction Composition Shoes ..... 65 lbs.

(b) Passenger road engines.
- Cast Iron Shoes ..... 30 lbs.
- High Firction Composition Shoes ..... 65 lbs.

(c) Suburban engines. ..... 28 lbs.

(d) Electric engines.
- JOE Engines ..... 45 lbs.
- G.E. Engines ..... 35 lbs.

RULES AND INSTRUCTIONS FOR AIR BRAKE TEST PROCEDURES

21.–Engineers, conductors and foreman of yard engines are jointly responsible with inspectors, for condition of air brake and train signal system on engines and cars to the extent that it is possible to detect defective equipment by required air tests.

22.–It must be known that all hoses are coupled, that hose cocks and cutout cocks are open except on the front and rear end; that all retaining valve handles are turned down; that all hand brakes are released except those necessary to hold slack while train is being stretched preparatory to inspection or necessary to hold train on a grade; that conductors (emergency) valve, caboose valve, drain cocks and release valves are closed.

23.—After coupling the engine to the train the train should be stretched to detect faulty couplers, excessive slack, etc. Following this, the engine brake pipe and signal hose must be blown out by partially opening the cocks and the hoses coupled. The angle cock on the engine should be opened slowly to prevent an emergency application of the brakes. While engine is charging the train, train should be inspected for leakage and hand brakes released if not required to hold train on a grade.

24.—When yard air pressure has been used to charge a train preparatory to attaching a road engine, the angle cock on the engine must be opened first to fill the hoses and then the angle cock on the car. Angle cocks should be opened slowly to prevent emergency application of the brakes.

25.—When making brake test on a passenger train the signal to the engineer to apply brakes will be given by opening the communicating signal valve or push button on any car in the train. After the brakes have been inspected, the signal to release the brakes must be given by opening the communicating signal valve or push button on the last car from which the signal can be given. The communicating signal valve should be held open 2 seconds depending on the length of the train. An interval of 1 second per car in the train should be permitted to elapse between successive discharges of air from the communicating signal valve in order to insure separation of signal blasts.

26.—When changing engines at terminal points, the air pressure from the train communicating signal system must be exhausted so that it will be known that the communicating signal equipment on engines coupling to train will fully charge and maintain the required pressure before departure of train.

27.—The communicating signal system on passenger equipment trains must be tested and known to be in suitable condition for service before leaving initial terminal and at each point where cutout cock has been closed or signal hose parted.

28.—Condensation must be blown from the pipe from which air is taken before connecting yard line or engine to train.

29.—When a yard engine is used to handle passenger equipment, the engine brake pipe must be thoroughly blown out by partially opening the angle cock before air hose coupling is made.

30.—Each train must have air brakes in effective operating condition and at no time shall the number and location of operative air brakes be less than permitted by Federal requirements. When piston travel is in excess of 10 inches, the air brakes cannot be considered in effective operating condition.

31.—When a unit of an engine consist is changed enroute, an application and release test of the engine brakes must be made as follows:

(a) With equipment fully charged, make a 15 PSI brake pipe reduction with automatic brake valve and observe that brakes apply on each unit. Release automatic brake and observe brakes release on each unit.

(b) Apply independent brake and observe brakes apply on each unit. Release independent brake and observe brakes release on each unit.

(c) Make a 15 PSI brake pipe reduction with automatic brake valve and observe that brakes apply on each unit. Release brake by depressing independent brake valve handle and observe brakes release on each unit.

INITIAL TERMINAL ROAD TRAIN AIR BRAKE TEST

32.—All trains must be given inspection and tests as specified by Rules 33 through 44 at the following points:

(a) Where a train is originally made up (Initial Terminal).

(b) Where train consist is changed other than by adding or removing a solid block of cars and train brake system remains charged.

(c) Where train is received in interchange from another railroad. (Unless otherwise provided).

33.—Train air brake system must be charged to required air pressure, angle cocks and cutout cocks must be properly positioned, air hose must be properly coupled and must be in condition for service. An examination must be made for leaks and necessary repairs made to reduce leakage to a minimum. Retaining valves and retaining valve pipes must be inspected and known to be in condition for service.

34.—After the brake system on a freight train is charged within 15 pounds of the setting of the feed valve or regulating valve on the engine, but to not less than 65 pounds, as indicated by an accurate gauge at rear of train, and on a passenger train when charged to not less than 75 pounds, and upon receiving the signal to apply brakes for test, a 15 pound brake pipe service reduction must be made in automatic brake operation, the brake valve lapped, wait 40 seconds, and then observe the brake pipe gauge and time the brake pipe drop (leakage) for one minute, after which brake pipe reduction must be increased to full service.

35.–With 26L brake equipment, the brake pipe leakage test must be performed in the following manner:

(a) With the brake valve cut off valve in IN position, move the automatic brake valve handle toward SERVICE position until the equalizing reservoir pressure has been reduced 15 PSI, then stop and leave the handle in this position.

(b) As soon as the brake pipe pressure has reduced to the level of the equalizing reservoir pressure and service exhaust closes, depress the brake valve cut off valve handle and move it to OUT position. Wait 40 seconds and then observe the brake pipe gauge and time the brake pipe pressure drop (leakage) for one minute.

(c) If after completion of the brake pipe leakage test, the brake pipe leakage has not reduced the brake pipe pressure to the equivalent of a full service brake application, the following method must be followed in making an additional brake pipe reduction to obtain a full service brake application.

Move the automatic brake valve handle further toward HANDLE-OFF position to reduce the equalizing reservoir pressure below the brake pipe pressure, but not to exceed 3 PSI below. Move brake valve cut off valve to IN position and then move brake valve handle toward HANDLE-OFF position until a full service brake application is obtained. Move brake valve cut off valve to OUT position until brake test is completed. When signal to release brakes has been received, the cut off valve should be moved to IN position and the automatic brake valve handle placed in RELEASE position.

36.–When the engine used to haul the train is provided with means for maintaining brake pipe pressure at a constant level during service application of the train brakes, this feature must be cut out during air brake tests.

37.–Inspection of the train brakes must be made to determine that angle cocks are properly positioned, that the brakes are applied on each car, that piston travel is correct, that brake rigging does not bind or foul, and that all parts of the brake equipment are properly secured. When this inspection has been completed, the release signal must be given and brakes released and each brake inspected to see that all have released. Before proceeding it must be known that brake pipe pressure, as indicated at rear of train, is being restored.

38.–Brake pipe leakage must not exceed 5 pounds per minute.

39.–At initial terminal piston travel of body mounted brake cylinders which is less than 7 inches or more than 9 inches must be adjusted to nominally 7 inches.

40.–Minimum brake cylinder piston travel of truck mounted brake cylinders must be sufficient to provide proper brake shoe clearance when brakes are released. Maximum piston travel must not exceed 6 inches.

41.–Piston travel of brake cylinders on freight cars equipped with other than standard single capacity brake, must be adjusted as indicated on badge plate or stencilling on car located in a conspicuous place near brake cylinder.

42.–When a test of air brakes has been completed by other employees the engineer and conductor must be advised that train is in proper condition to proceed.

43.–During standing test, brakes must not be applied or released until proper signal is given.

44.–Defects discovered during a standing test that cannot be repaired promptly must be reported to the foreman, inspector or conductor for appropriate action.

45.–When a yard test device is used, the train brake system must be charged and tested as prescribed by Rules 33 through 44. When practicable, the train should be kept charged until the road engine is coupled to the train. After the road engine is coupled to the train, an automatic brake application and release test of air brakes on rear car must be made.

46.–Intermediate inspections will be made at locations specified in the timetable to determine:

(1) Brake pipe leakage does not exceed 5 pounds per minute.
(2) Brakes apply on each car from a 20 pound service brake pipe reduction.
(3) Brake pipe rigging is properly secured and does not bind or foul.

47.–When cutting off cars or engines on passenger, freight, transfer and switching movements proceed as follows:

When detaching the engine or cars, or a combination of such, a full service brake pipe reduction *must* be made from the engine, after the service exhaust stops blowing, the engineer will advise the trainmen accordingly. *Then it is absolutely essential that the brake pipe angle cock be left fully open on car or cars left standing.* After recoupling, brake system must be recharged to required air pressure and before proceeding and upon receipt of proper request or signal, application and release test of brakes on rear car must be made from engine. Inspector or trainmen must determine if brakes on rear car of train apply and release.

Before proceeding it must be known that brake pipe pressure, as indicated at rear of train, is being restored.

48.—On a passenger or freight train where engine crew or train crew or both are changed at points other than initial terminals and consist including engine remain intact, the incoming engineer must immediately after stopping make a brake pipe reduction to not less than 20 pounds without waiting for a signal. Inspector or trainmen, whoever makes the test, will observe that brakes on rear car apply, then signal the outgoing engineer for release and observe that brakes on rear car release.

49.—At a point other than a terminal where one or more cars are added to a train, and after the train brake system is charged to not less than 65 pounds as indicated by a gauge at the rear of freight train and on a passenger train to not less than 75 pounds, tests of air brakes must be made to determine that brake pipe leakage does not exceed 5 pounds per minute as indicated by the brake pipe gauge after a 15 pound brake pipe reduction. After the leakage test is completed, brake pipe reduction must be increased to full service and it must be known that the brakes on each of these cars and on the rear car of train apply and release. Cars added to train which have not been inspected in accordance with Rules 33 through 44 must be so inspected and tested at next terminal where facilities are available for such attention.

At a terminal where a solid block of cars which had been previously charged and tested as prescribed by Rules 33 through 44 is added to a train, test must be made to determine that brakes on the rear car of train apply and release.

Before proceeding it must be known that the brake pipe pressure at the rear of the freight train is being restored.

50.—At locations where the crew of one carrier takes over control and operation of a run-through or a unit run-through train from the crew of another carrier, the crew of the receiving carrier must inspect and test the train to determine that:

(a) The cab of the engine contains a Form FRA-F-6180—48 completed as required by the FRA.

(b) Brake pipe leakage does not exceed 5 pounds per minute.

(c) Brakes apply and release on the rear car from a 20 pound brake pipe reduction.

If the cab of the engine does not contain a completed Form FRA-F-6180-48, the train must be inspected and tested as prescribed by Rules 33 through 44 before it proceeds.

A run-through train is a train which passes from one carrier to another carrier with no change in consist (including engine) other than the addition or removal of a block of one or more cars.

A unit run-through train is a train operated by more than one carrier on a continuous round trip cycle and consisting of assigned equipment.

TRANSFER TRAIN AND YARD MOVEMENT

51.–Transfer train and yard train movement not exceeding 20 miles, must have the air brake hose coupled between all cars, and after the brake system is charged to not less than 60 pounds, a 15 pound service brake pipe reduction must be made to determine that the brakes are applied on each car before releasing and proceeding.

52.–Transfer train and yard train movements exceeding 20 miles must have brake inspection in accordance with Rules 33 through 44.

RUNNING BRAKE TEST – PASSENGER TRAINS

53.–

(a) Running Test of the brakes must be made on every passenger train:

1. After leaving a terminal.
2. After changing engine.
3. After change of engine or train crews.
4. After changing position of angle cock.
5. When train has been excessively delayed.
6. Before passing over summit of mountain grades, approaching meeting points, railroad crossings, interlocking and draw-bridges.

(b) Running test must be made as soon as speed of train permits with not less than a 10 pound continuous brake pipe reduction. Train brakes must be applied with sufficient force to ascertain they are holding properly. Engine brakes must not be permitted to apply. Throttle position must be reduced to Run 5 or less, but not shut off unless conditions require it. If brakes do not operate properly in this test, engineer must stop train, determine cause and correct before proceeding.

(c) At points where running tests are required trainman will observe if brakes operate properly on rear of train. If brakes do not operate properly train must be stopped, cause determined and corrected before proceeding.

(d) Running test of brakes must not be made until entire train has passed over that part of track where engines are serviced or where track has been oiled unless it is known that entire train is on rails which have been sanded.

54.–Test of Brakes: When ready to make a backup movement with a passenger train in which the backup hose or its equivalent may or will have to be depended upon for control, and on receiving air communicating whistle signal to back, the engineer will lap the automatic brake valve. The trainman at the rear end will, when back up whistle signal is given, at once make a sufficient discharge from the backup hose cock or its equivalent to insure a substantial application of the brakes. When the engineer observes by air gauge and the brakes applying that this required application has been made, he will make the usual release and begin to back up. He will not move until the stated proofs of application are known. A running test must be made by use of the backup valve or its equivalent within 200 feet after the backup movement has begun. If this is not done, engineer must stop the train and a standing test must be repeated.

SPECIAL INSTRUCTIONS

55.–Use of Sand

(a) Excessive use of sand at any point is prohibited and its use must be restricted to actual necessity.

(b) Sand should be used during all emergency stops. Sand should also be used during service brake applications when necessary to prevent wheel sliding and when so used on passenger trains, it must be applied under the entire train before brake application is started.

(c) When operating the sander valve, do not open and close it rapidly, nor hold it part way between "OFF" and "ON" positions. To do so will deplete main reservoir pressure and result in excessive sand delivery on some equipment and no sand delivery on others.

(d) If engine starts to slip, close or reduce throttle immediately. After drive wheels stop slipping open sanders before again opening the throttle. Sanding the rails while drive wheels are slipping not only results in damage to rails but if drive wheels are stopped from slipping on sand, the train may be broken in two or the engine damaged.

56.–Each train must have the air brakes on all cars in effective operating condition leaving terminals and repair points, except in cases of emergency, and at no time shall the number of operative air brakes be less than 85% of the total. Each trailing power unit of an engine will be counted as one car.

The following table is for convenience in quickly determining the maximum number of inoperative brakes with which a train may be permitted to proceed to a point where repairs can be made.

No. of Cars	Inoperative Brakes
6 cars or less	0 cars
7 cars to 13 cars, inclusive	1 car
14 cars to 19 cars, inclusive	2 cars
20 cars to 26 cars, inclusive	3 cars
27 cars to 33 cars, inclusive	4 cars
34 cars to 39 cars, inclusive	5 cars
40 cars to 46 cars, inclusive	6 cars
47 cars to 53 cars, inclusive	7 cars
54 cars to 59 cars, inclusive	8 cars
60 cars to 66 cars, inclusive	9 cars
67 cars to 73 cars, inclusive	10 cars
74 cars to 79 cars, inclusive	11 cars
80 cars to 86 cars, inclusive	12 cars
87 cars to 93 cars, inclusive	13 cars
94 cars to 99 cars, inclusive	14 cars
100 cars to 106 cars, inclusive	15 cars
107 cars to 113 cars, inclusive	16 cars
114 cars to 119 cars, inclusive	17 cars
120 cars to 126 cars, inclusive	18 cars
127 cars to 133 cars, inclusive	19 cars
134 cars to 139 cars, inclusive	20 cars
140 cars to 146 cars, inclusive	21 cars
147 cars to 153 cars, inclusive	22 cars
154 cars to 159 cars, inclusive	23 cars

57.–Conductor must inform the engineer, at the first opportunity, in regard to the following conditions.

(a) Number of loaded cars.
(b) Number of empty cars.
(c) Trailing tonnage.
(d) Location of cars loaded with commodities which require special care and handling.
(e) Any unusual conditions concerning makeup of train which would require special handling to control slack action or affect the safety or operation of the train.
(f) When air brakes release on caboose, movement of caboose when starting train, and any other information pertinent to the operation of trains.

58.–It must be known that all hand brakes and air brakes are released on cars before leaving terminals or any point enroute.

59.–Trainmen must note that pressure retaining valves are properly positioned on cars added to the train enroute.

60.–Reducing Overcharge In Engine Air Brake Systems: Engine air brake system may become overcharged due to one or more of the following reasons:

(a) Automatic brake valve placed in release position for too long a period.

(b) Feed valve adjustment changed to a lower setting.

(c) Variation in feed valve setting between operating cabs of multiple unit engine.

(d) Variation in brake pipe gauge reading between operating cabs.

61.–The excess pressure of an overcharged engine air brake system can be reduced in the following manner:

(a) With No. 6, 8 EL, 26L brake equipment move the independent brake valve handle to release position (on self-lapping type of independent brake valves, depress handle). Place automatic brake valve handle in service position and reduce brake pipe pressure not less than 20 pounds below the desired feed valve setting, after which place automatic and independent brake valves in running position. This method will reduce the pressure in the pressure chamber (or auxiliary reservoir) at the same time brake pipe pressure is being reduced.

(b) With 24RL brake equipment proceed the same as in Paragraph A except place automatic brake valve in emergency position in order to reduce the overcharge in the emergency reservoir. If circumstances will not permit an emergency application, the overcharge in the emergency reservoir can be reduced gradually by making a number of automatic service applications with the independent brake valve held in release (depressed) position.

62.–To insure no overcharge exists due to difference in feed valve setting or brake pipe gauge reading, always make an automatic full service brake application with independent brake valve handle in release position after changing operating ends.

63.–Brakes Overcharged: Means that the brake pipe pressure has been increased above the setting of the feed valve. This condition will result in undesired brake application and brakes sticking throughout the train.

64.–When an overcharge occurs on a train enroute, an attempt must be made to maintain that pressure until the conditions causing the overcharge can be corrected. On an engine where the main reservoir pressure fluctuates and which is equipped with the No. 6 automatic brake valve, the brake pipe pressure can be maintained to a pressure slightly below the lowest drop in main reservoir pressure by placing the automatic brake valve handle between holding and lap position sufficiently to prevent a drop in the brake pipe pressure. The same operation can be accomplished by placing the automatic brake valve handle of the D-24, 8-ET or 8-EL brake valves between running and first service position.

65.–The overcharge of a brake system on any train can be reduced by releasing the pressure from the reservoirs by use of the release valve on each car, or by use of the automatic brake valve. This operation requires that a brake application be started with a service reduction and the brake valve placed in emergency position and wait not less than 70 seconds for the control valve vent valve to close. After this the brake valve should be placed in running position for about one minute and the procedure repeated several times if necessary. Twenty seconds is sufficient time for the control valve vent valves to close on passenger car brake equipment.

66.–Reduction: A reduction of two sevenths of the brake pipe pressure provides maximum braking power. A further reduction only results a waste of brake pipe air, and an irregular and difficult release of the brakes.

Illustration: To obtain a full service brake application with 80 pounds brake pipe pressure it will be necessary to make a reduction of 23 pounds, 90 pounds brake pipe pressure reduction of 26 pounds, and 110 pounds brake pipe pressure reduction of 31 pounds to obtain an equalization of five sevenths with 8 inch piston travel.

67.–Length of Operative Brake Pipe: The approximate length of an operative brake pipe will be indicated by the length of time the service exhaust port remains open during a service application. The amount of brake pipe pressure is indicated by the degree of audibility during the discharge of pressure through the service exhaust port during a service application. Rapid opening and closing of the service exhaust port during a service application indicates a restriction in the train brake pipe, such as a closed or partially closed angle cock, collapsed or kinked air hose.

68.–Caboose Gauge: The caboose air gauge must be observed by members of the crew in the caboose at sufficient distance from railroad crossings, meeting points, turnouts, critical points and at frequent intervals enroute to be certain the brake pipe is not obstructed and train is charged with sufficient pressure.

69.–Defective Air Brakes: When the air brake is cut out on a car enroute, the conductor must make a report on Form 975.

70.–Should air brake on rear car of a passenger train become inoperative enroute, the train may be moved to the first available point of communication with a trainman riding the car to operate the hand brake if necessary. A car having air brakes inoperative must not be the rear car of a passenger train unless authorized by the Superintendent.

71.–Broken Pipes – Passenger and Freight Train:

(a) If, after leaving a terminal, the main brake pipe breaks on a passenger car, the signal line on the defective car may be used to transmit brake pipe pressure to the rear cars by forcibly coupling the signal line hose coupling to the brake pipe hose coupling on cars adjoining the one with the defective brake pipe. The air communicating signal will be inoperative on the defective car and all cars following; however, by closing the signal line cutout cock at the rear of the car directly ahead of the defective car, air communicating signal will be operative on cars ahead of the defective cars. Communicating signal discharge valve cutout cock must be closed and brakes cut out on defective car. Before proceeding, a test of the brakes must be made.

The application and release of brakes will be slower when using the signal line in place of the brake pipe and trainmen and engineers must govern themselves accordingly. The same procedure may be followed in the event main brake pipe breaks on a trailing unit of a multiple unit engine.

(b) When trouble is experienced with broken or leaking pipes, an understanding of the operation of the brake equipment involved will expedite repairs and reduce the time of train delay. After making temporary repairs, an operating test of the brake equipment must be made.

Temporary repairs can be made by:

1. Closing a cutout cock when possible.
2. Use a pipe plug.
3. Make a tight bend or smash pipe.
4. Apply a blind gasket under flange fitting or at a union connection.

72.–Loss of Main Reservoir Air Pressure on an Engine: In event of loss of main reservoir air pressure on a unit of a multiple unit consist a member of the crew will close the equalizing main reservoir cutout cocks at all four corners of the unit affected. These one inch cutout cocks are located outside under the carbody.

73.–Cutting Out Brakes:

(a) When necessary to cut out the air brake on a freight car close the cutout cock in the branch pipe, exhaust all air from the auxiliary and emergency reservoirs by opening the release valve and block the release valve open.

(b) To cut out the brake on a passenger car, close the cutout cock in the crossover pipe, and exhaust all the air from the reservoirs, leaving drain cocks open.

(c) If foundation brake rigging becomes defective on passenger cars equipped with "UC" "D-22" or "26-C" brake equipment the cutout in the brake cylinder pipe leading to the truck having the defective part should be closed. Reservoirs need not be drained.

74.–Position of Cock Handles: Angle cocks are open when the handle is in line with the hose and closed when the handle is crosswise of the hose. All cutout cocks are open when the handle is crosswise of the pipe and closed when the handle is in line with the pipe. Cocks without handles have a groove in the top of the key and when this groove is in line with the pipe the cock is open; when the groove is crosswise of the pipe the cock is closed.

75.–Alleged Air Brake Failures: In cases of alleged air brake failure, the engineer must leave the brake valve in emergency position, wait for the conductor to come to the engine and then accompanied by available employees will observe the position of all hose cock and retaining valve handles, number of brakes applied, number of brakes cut out, and be able to report in detail to the proper officer.

76.–Air Hose Removal: Each defective hose and fitting removed from a car enroute must be noted on Form 975. If, however, a defective hose on either an engine or car causes accident to person, lading, or property, the conductor will send the hose to the Division Superintendent and render accident report giving in detail all information possible. The defective hose must ultimately reach the Engineer of Tests for report on cause of condition as found. In the absence of extra hose enroute, those from engine pilot or rear of last car may be used.

77.–Air Hose Gaskets: In applying air hose gasket, the groove in the hose coupling provided to receive the gasket must be cleaned out. It is not permissible to trim the gasket in order to have it enter groove of coupling.

78.–(a) Do not apply brakes from the rear except in case of emergency, such as to prevent accident, damage to property, injury, loss of life or violation of Operating Rules.

(b) In case of emergency requiring immediate stops, the conductor's (emergency) valve or caboose valve must be fully opened quickly and left open until train stops.

(c) To obtain a service brake application from the rear the conductor's (emergency) valve or caboose valve should be opened gradually and the opening increased until the application of brakes is effective.

(d) Should the engineer sound the whistle signal to apply brakes while train is in motion, a conductor's (emergency) valve or caboose valve shall be opened quickly and left open until train is stopped. If no air pressure escapes when valve is opened, hand brakes must be applied as quickly as possible.

79.–Rotary type caboose valves will be operated in the following manner:

(a) In case of emergency, move valve handle to full open position and leave it there until train stops.

(b) For other than emergency stops, move handle to NOTCH No. 2. Leave it there for ten seconds, then to NOTCH No. 3. If speed of train begins to reduce and continues to reduce, leave handle in that position until train stops. If speed does not continue to reduce with handle in NOTCH 3, move handle to NOTCH 4 for fifteen seconds, or if it is evident that more braking power is necessary to complete the stop, move handle to NOTCH 5. If necessary to move handle to FULL OPEN position to complete the stop, allow handle to remain in NOTCH No. 5 for at least ten seconds before moving it to full open position.

(c) After handle has been moved to any position to apply brakes, it must not be returned to RUNNING or CLOSED position until train is brought to a complete stop.

(d) After train has stopped, move valve handle to CLOSED position to permit release of train brakes.

80.–The use of the caboose valve or backup valve as a means of creating a brake pipe reduction to control train slack action or to release sticking brakes on a train moving forward is prohibited. Unnecessary use of the air whistle located at the caboose platform is prohibited.

81.–When a backup train movement is controlled by use of backup hose or its equivalent by a trainman or backup man, the automatic brake valve on the engine handling the train must be in running position.

82.–Use of Backup Hose: To operate the brakes with a service application from the backup hose or its equivalent, its valve must be opened gradually until it is either wide open or the train slowed down as much as desired or stopped. The valve must not be repeatedly opened and closed, as the desired safe and smooth operation cannot be obtained in this manner. If the brakes are applied too hard, and stopping the train too soon, completely close valve and allow the brakes to release and the auxiliary reservoirs to recharge. In case of emergency the valve should be opened wide instantly, and left open until the train is stopped. Backup hose on all passenger trains must be coupled to the brake pipe hose, air cut in and ready for service and hose hung in a manner to insure against falling off, and maintained in that position during the entire time trains are in service on the road. Exception to the above will be made when the rear car of the passenger train is an observation, private or other car having a permanent backup pipe, cutout cock and signal whistle, in which case the backup hose need not be applied. Backup hose containing valves or fittings having less than the full opening of the 1 inch stop cock, must not be used. Modifying the standard backup hose or its warning whistle is prohibited.

83.–Backup Whistle: To operate the backup whistle, simply open and close the whistle cock.

84.–Use and Operation of DE-1 Backup Valve: This type of backup valve is applied to most observation cars. It has the following positions:

Notch 1 Running position
Notch 2 Lap position
Notch 3 Lap position
Notch 4 Service position
Notch 5 Service position
Notch 6 Service position
Notch 7 Emergency position

(a) To apply automatic brakes move valve handle to position 4 to reduce brake pipe pressure. Observe red hand on air gauge to determine brake cylinder pressure. Avoid high brake cylinder pressure unless required. If Necessary, positions 5 and 6 may be used to more quickly reduce brake pipe pressure. When train has stopped, move valve handle to position 1 to release brakes.

(b) To obtain emergency brake application move the brake valve handle quickly to Notch 7 and leave it there until train stops.

(c) When not in use brake valve handle must always be in Notch 1.

85.–Emergency brake valves on all engines are located on the left side of the cab and on carbody engines adjacent to the passage way.

86.–These "Emergency Brake Valves" are provided for use in case of emergency only.

87.–The safety control system on engines must not be cut out or made inoperative in any manner unless defective. When cut out, full particulars must be entered on the prescribed form.

88.–Changing Operating Ends-Brake Control:

(a) 6DS, 14EL, 6BL, 6SL Brake Equipment.

1. Make a 25 lb. brake pipe reduction with automatic brake valve and place brake valve in lap position.
2. Place doubleheading cock in TRAILING (closed) position.
3. Place independent brake valve in running position.
4. Open transfer valve cock.

To assume brake control at opposite end:

1. Close transfer valve cock.
2. Place independent brake valve in full application position.
3. Place automatic brake valve in running position.
4. Place doubleheading cock in LEAD (open) position.

(b) 14EL, 6BL, 6SL Modified (Has 26L Independent Brake Valve).

1. Make a 20 lb. brake pipe reduction with automatic brake valve and place brake valve in lap position.
2. Place doubleheading cock in DEAD position.
3. Place automatic and independent brake valve in running position and remove brake valve handles if removable.
4. Place cutout cock below independent brake valve in closed position.

To assume brake control at opposite end:

1. Insert brake valve handles and place independent brake valve in full application position.
2. Slowly move doubleheading cock to "LEAD" position.
3. Place automatic brake valve in running position.
4. Place cutout cock below independent brake valve in open position.

(c) 8ET–8EL Brake Equipment.

1. Make a 25 lb. brake pipe reduction and place brake valve handle in lap psoition.
2. Close doubleheading cutout cock.
3. Place cutout cock (below independent brake valve) in closed position.
4. Place automatic and independent brake valves in running position.

To assume brake control at opposite end:

1. Place automatic brake valve handle in running position.
2. Place independent brake valve handle in applied position.
3. Place cutout cock handle (below independent brake valve) in open position.
4. Place doubleheading cock handle in open position.

(d) 24RL Brake Equipment.

1. Make a 25 lb. brake pipe reduction with automatic brake valve.
2. Close doubleheading cock.
3. Place automatic and independent brake valves in RUNNING position, note that brakes remain applied and remove brake valve handles.
4. Place rotair valve (K2) in LAP position (K2A) in PASS LAP or FRT LAP position (type of service to govern) if unit is modified and rotair valve handle removed. Place cutout cock below independent brake valve in closed position.

To assume brake control at opposite end:

1. Insert brake valve handles and place independent brake valve in FULL APPLICATION position.
2. Place rotair valve handle in PASS or FRT position (type of service to govern) if unit is modified and rotair valve handle removed place cutout cock below independent brake valve in open position.
3. Slowly open doubleheading cock.

(e) 26L Brake Equipment.

1. Make a 25 lb. brake pipe reduction with automatic brake valve.
2. Place brake pipe cut off valve in OUT position.
3. Place automatic brake valve handle in HANDLE OFF position and remove handle.
4. Place independent in RUNNING position. Note that brakes remain applied.
5. Place MU2A valve in TRAIL 24 or 26 position.

To assume brake control at opposite end:

1. Insert automatic brake valve handle.
2. Place independent brake valve handle in FULL APPLICATION position.
3. Place MU2A valve in LEAD or DEAD position.
4. Place brake pipe cut-off valve in FREIGHT position for freight trains and PASSENGER position for passenger trains.

89.–Operation of a Detached "B" Unit With Hostler Brake Valve: Before separating or closing cocks between units make a full service automatic brake application. Whenever practical set the reducing valve at or near the brake pipe pressure carried on the "A" unit. Close brake pipe and independent application and release pipe end cocks on both ends of the unit and part the air hose.

Open the cutout cock between the hostlers brake valve and the independent application and release pipe and move the brake valve handle into the application zone. Then open the cock at the reducing valve to release the brake and recharge the brake system. Move the hostlers brake valve handle to release position. If the brakes fail to release after a short interval of time it may be necessary to make an emergency application by opening the emergency valve to reduce an overcharge of the auxiliary and emergency reservoir. When a controlled emergency cutout cock is used on the D-24 control valve, the handle should be placed in "P" position.

When the "A" and "B" units have been reassembled and the control transferred to the "A" unit, note that the cutout cocks at the reducing valve and the hostlers brake valve are closed and all end hose are connected and the cocks open.

90.–Dead Engines in Train: When engines are handled dead in train, the following procedure relative to the conditioning of brake equipment will govern:

(a) No. 6DS, 6SL, 6BL and 14EL Brake Equipment:

1. Automatic and independent brake valve handles must be placed and secured in RUNNING position.
2. Doubleheading cock closed, if 3 position type, cock must be placed in DEAD position.
3. Dead engine cutout cock must be OPENED and distributing valve safety valve adjusted to open at 20 PSI.
4. If engine is equipped with transfer valve cock, the cock must be in CLOSED position.

(b) 6BL, 6SL, 14EL Modified Brake Equipment (Equipped with No. 26L Independent Brake Valve);

1. Cutout cock to 26L independent brake valve must be in OPEN position.
2. Independent and automatic brake valve handles placed and secured in RUNNING position.
3. Doubleheading cock in DEAD position.
4. Dead engine cutout cock must be in OPEN position and distributing valve safety valve must be adjusted to open at 20 PSI.

(c) No. 8ET, 8EL Brake Equipment:
1. Place automatic and independent valves in RUNNING position.
2. Place cutout cock to independent brake valve in OPEN position.
3. Place doubleheading cock in CLOSED position.
4. Place dead engine cap or cock in DEAD position.
5. Place controlled emergency cock in PASSENGER position.
6. Set safety valve on distributing valve to open at 20 PSI.
7. On "B" units equipped with relay valve only, place dead engine cock in OPEN position.

(d) 24RL Brake Equipment "A" Units:
1. Automatic and independent brake valves must be placed and secured in RUNNING position.
2. Dead engine cock on D-24 control valve must be placed in DEAD position.
3. Rotair valve must be placed in PASS position. If handle removed place cutout cock below independent brake valve in OPEN position.
4. Set control valve safety valve to open at 20 pounds air pressure.
5. Main reservoir equalizing pipe cutout cock at rear of unit must be closed and actuating and application and release pipe cutout cocks must be in OPEN position.

(e) 24RL Brake Equipment "B" Unit:
1. Hostler's brake valve handle must be placed in OFF position and handle removed.
2. Cutout cock in application and release pipe under brake valve must be in OPEN position.
3. Cutout cock in main reservoir supply pipe above brake valve in CLOSED position.
4. Cutout cocks in main reservoir equalizing pipe at each end of unit must be in CLOSED position.
5. Cutout cocks in actuating and application and release pipe at each end of unit must be in OPEN position.
6. Cutout cock on D-24 control valve bracket must be placed in PASS position.
7. Dead engine cock at D-24 control valve must be placed in DEAD position.

(f) 26L Brake Equipment:

1. Independent brake valve must be placed in RELEASE position and secured, remove handle if removable type.
2. MU2A valve in LEAD or DEAD position.
3. Automatic brake valve in HANDLE OFF position and handle removed.
4. Brake pipe cutoff valve in OUT position.
5. Dead engine cutout cock in OPEN position.
6. Cutout cocks in main reservoir equalizing pipe and forward and reverse sanding pipes at both ends of unit must be in CLOSED position.
7. Cutout cocks in actuating and application and release pipe at both ends of unit must be in OPEN position.

91.–When engines are handled dead in train the following will govern:

When engine handling the train is of the wagon type: – Single unit road switcher, yard switcher or wagon type engines may be handled next behind the road engine.

When engine handling the train is of the road or yard switcher type: – Wagon type engines or a series of such engines may be handled next behind the road engine, but road and yard switcher type engines must be separated from the road engine by at least one car and must be separated from each other by one or more cars, and located not to exceed 25 car lengths from the road hauling engine.

92.–When idling engines are moved in train, the dead engine cock must be left in LIVE or CLOSED position.

93.–When brakes fail to fully release it may be due to the independent brake valve brake cylinder pressure setting higher than required in Rule 20. When noting a differential of 5 lbs. above the standard setting, it must be reported on Form 602.

94.–Recapturing Train Line Air After An Amergency Application Has Occurred: In the event of an emergency application, place the automatic brake valve handle in EMERGENCY position and hold it there for one full minute before returning to running position. Failure to comply with time limit requirements will result in failure to recapture train line air pressure and sequence must be repeated.

95.–Resetting A-1 Charging Pilot Cut Off Valve: If after compliance with Rule 94, which will reset the A-1 charging pilot cut off valve and restore brake pipe pressure on the lead unit, you find that the sanders continue to be actuated on the entire consist, you must proceed with the following instructions:

(a) On the lead (controlling unit), make a full reduction of brake pipe pressure.

(b) Close the brake pipe cut off valve by depressing the handle and moving to the "OUT" position.

(c) Proceed to the trailing affected unit, place the brake pipe cut off valve in FREIGHT position to cut in the automatic brake valve.

(d) Place the automatic brake valve handle in emergency position, hold it there for one full minute before placing the automatic brake valve in handle off position and note that the sanders have shut off.

(e) After the condition has been corrected, restore brake equipment on the consist to proper condition for movement per Rule 88.

96.–Air Compressor: The air compressor is the source of compressed air supply used to operate the engine and car air brake equipment and other air operated devices on the engine. If air compressor indicates an overheated condition or develops knocks or other unusual noises, the engine of the affected unit must be shut down and under adverse cold weather conditions, the engine cooling water system and cab heaters *must* be drained. If the compressor indicates overheating on any unit, the compressor may be unloaded by actuating the unloader magnet valve.

97.–Doubleheading: When more than one engine is used to handle a train, air brakes must be operated from the lead engine and automatic brake valves on all other engines must be cut out, handle of brake valve kept in running position and air compressors kept running if practicable.

98.–Coupling on Doubleheading Engine: When a train is to have a helper engine coupled ahead the regular engineer will apply the brakes with a 25 pound brake pipe reduction before the helper couples on, leaving them applied and closing the doubleheading cock or cutting the brake valve out and conditioning the engine for dead. The helper engineer must, after coupling, charge the braking system to required air pressure and before proceeding and upon receipt of proper request or signal, application and release tests of brakes on rear car must be made from engine in automatic brake application. Inspector or trainman must determine if brakes on rear car of train properly apply and release. This applies on both freight and passenger service.

99.–Cutting Off Doubleheading Engine: When a helper engine ahead is to be cut off, the helper engineer will apply the brakes with a 25 pound brake pipe reduction and leave them applied. The regular engineer will condition his engine for lead, then charge the braking system to required air pressure and before proceeding and upon receipt of proper request or signal, application and release tests of brakes on rear car must be made from engine in automatic brake application. Inspector or trainman must determine if brakes on rear car of train properly apply and release. This applies on both freight and passenger service.

100.–Charging and Releasing Brakes – Two Engine Doubleheading: Charging and releasing brakes enroute must be done only from the leading engine. If the engineer in control cannot release and charge the brakes properly, the train must be stopped and the cause located and remedied. The automatic brake valve on the second engine must not be cut in at any time or for any reason, except in case of an emergency of which the head engineer is unaware, or to avoid terminal delay when double header is coupled to an uncharged train. In the latter case, upon request of the engineer of the leading engine, the doubleheading cock on the second engine will be opened until the train is charged to standard pressure, immediately after which it must be closed and left closed and the leading engineer notified.

101.–Brake Failure on Leading Engine: If the brake equipment of the leading engine fails enroute, preventing it from further controlling train brakes, stop the train, then close the doubleheading cock on the leading engine and open the doubleheading cock on the second engine. The engineer of the second engine will then assume charge of the brakes, but will operate them as directed by audible or visible signals, given by the engineer on the leading engine. The positions of the two engines will, if practicable, be reversed at the first opportunity.

102.–Brakes on Helper Engine Cut In: When a helper engine is used at the rear of a train, the air hose between rear car and helper must be coupled and hose cocks opened: the doubleheading cock on helper engine must be closed and brake valve carried in running position.

103.–When braking a freight train "stretched" the independent brake valve must be held in *full release* or *depressed* position continually to assure the brakes are released on all units in the consist.

Depletion of brake cylinder pressure on the air gage does not assure that brakes are released on the trailing unit.

FREIGHT TRAIN HANDLING

104.–Compliance with the following instructions will result in smooth train handling under ordinary conditions. However, varying train make-ups and other governing conditions make it impossible to provide rules which will apply in every instance. Therefore, if it is found that the desired results are not obtained with any particular train, the brake manipulation must be so modified as to produce safe and smooth train operation. The engineer who is most successful in handling long freight trains is the one who makes a study of how his manipulation of the throttle or brake valve will affect the slack in the train.

105.–Train Slack: There are two kinds of train slack – loose slack and spring slack. They work together. Loose slack is that which can be run in or out without compressing the draft gear springs. It merely permits of slack movement in trains, which results in shocks. Spring slack is the additional amount that occurs when draft springs are compressed, and which helps to drive the slack in the opposite direction, thereby increasing the shocks. These springs are compressed with slack action either in or out heavily, and at such times their influence on slack action must be considered in addition to that of power, brakes and track conditions. The first of the following illustrations gives an example of this draft gear action.

With absolutely no slack and good draft rigging, trains could not be broken in two. The same can be said with slack either all in or all out if it is prevented from changing, as the damage results from its sudden change. While slack is running in or out rapidly, one portion of the train attains a lower speed than the other, and the shock is the result of the draft rigging having to suddenly make the speed of the entire train uniform at the instant the train slack is all in or all out. How heavy the shock will be depends mainly on the difference in speed that must instantly be made uniform, and on the weight of the cars and lading that must be suddenly changed to a common speed. While weight such as with a heavy engine or loaded cars, is an important factor, change in speed is more important, because changing speed suddenly three miles per hour will cause nine times the shock resulting from a similar quick speed change of one mile per hour.

106.–Controlling Train Slack: The following illustrations to demonstrate that the main cause for damaging shocks in train handling is slack action, and that usually it can be controlled.

(a) Assume that on an ascending grade steep enough to alone start the cars back, the train is stopped with the engine brake. If the engine brake is gradually released as the speed becomes low and entirely released just before the stop is completed, the compressed draft gear springs will start the slack back gradually until the entire train has moved back with little or no slack action. A light application of either train or engine brakes will then stop it without damage. Damage will result if the slack runs back in the entire train while the engine is anchored with the engine brakes.

(b) Assume a long train, with empties behind loads, moving on level grade, is being stopped with the train brakes from a speed of 25 or 30 miles per hour. If the throttle is eased off so as to permit the slack to run in towards the engine and the brake then applied, the serial application of the brake towards the rear will cause a further run in of slack with compression of draft gear springs until the brake application reaches the empty cars. Then, due to the greater braking force on the empty cars, the slack will be jerked out rapidly, the slack being aggravated by the compressed draft gear springs on the head end assisting in driving the slack to the rear. If the brakes had been applied with the slack stretched, as would be the case with a working throttle, there would have been no sudden change of slack because the only additional slack movement possible would be further compression of the draft gear springs. When a train is stopped with the slack all out, severe strains are placed on the draft gear just before the stop is completed. This, however, can be avoided if when within about 100 feet of the point where stop is to be made, a further brake pipe reduction is made and the engine brake permitted to apply. This method will reduce the heavy but steady pull on the draft rigging which occurs at about the time, and just before the stop is completed.

(c) When empty cars are located on the head end of a train, it will be apparent that the train cannot be stopped in the above manner. If brakes are applied with the train slack stretched, as soon as the brake application takes place on the empty cars ahead, due to the greater braking force, there will be a damaging run in of the slack on the rear end, which may result in damaging some of the weaker cars. Consequently, the proper way to stop a train of this make up without severe slack action, is to bunch the slack gently by a very light application or a number of light applications and releases of the independent brake. In fact, on any long train which is made up entirely of loads or empties, or a train with empties on the head end, the slack should be bunched gently with the independent brake before applying the automatic brake.

(d) Assume a train is being backed at low speed with engine working heavy. This will compress the draft springs, and if power is shut off and a reduction of about 8 pounds is made, the brakes on the engine and adjacent cars will feel the brake application first and start the slack out. The draft gear springs will help to run it out faster and by the time the slack is all out there will be a difference of 3 or 4 miles per hour in speed between the head and the rear end of train which will produce a damaging slack shock and probably break the train in two. This will not occur, if when backing, power is used moderately and then heavier beginning at the time the brake application is started. If a lighter reduction is made and the engine brakes are prevented from applying, no serious shock can occur because the lighter reduction will have a small retarding effect on the head end of the train. Heavier use of power during the brake application together with preventing the engine brakes applying, will largely offset the effect of the earlier response of the head than of the rear brakes, thereby preventing the slack from running out harshly.

(e) Train slack cannot be changed both gently and quickly; therefore, when the slack must change as a result of grade or the use of power or brakes while stopping, starting or running, allow ample time for the change to be completed before doing anything that would hasten it.

107.–Slack Change Due to Engine Slipping: Excessive slipping of driving wheels causes severe shocks to draft rigging. The draft gear springs cause the slack to change quickly, and this is usually followed by a severe shock with the renewed use of power. Hence, when slipping is probable, use sand and no more throttle than necessary.

108.–When making a backup movement with more than three units in multiple, there is a danger of jackknifing the units which may result in rail overturning under the engine. Before making backup movements with more than three units, the leading unit, or units, must be isolated and only the rear three units allowed to work power.

109.–Starting Freight Trains: Do not start until ample time has been allowed for rear brakes to release. After releasing, engineer should wait the time shown in the following table before attempting to start train:

Train of	Wait
25 cars	1 Minute
50 cars	2 Minutes
75 cars	3 Minutes
100 cars	4 Minutes
125 cars	5 Minutes
150 cars	6 Minutes

When starting, avoid excessive drawbar strains and objectionable shocks by keeping the engine at a very slow and uniform speed for four or five car lengths, not varying from this practice, even if the entire train is started in less distance. Also, keep speed low enough for trainmen to inspect the entire train, release any sticking brakes and safely board the train. Keep a look out to the rear until trainmen are on and a signal is given to proceed.

110.–Taking Slack: When it is necessary to take the slack to start a train, the operation must be handled carefully to avoid harsh slack action or a roll back of the train and only sufficient slack taken to start the train.

During a slacking operation, the engine must be moved very slowly in both the backward and the forward movement.

111.–Starting Train on Descending Grade: In order to control the speed against the accelerating influence of the grade when starting a freight train on a descending grade, the engine brake must be used if necessary to keep the speed slow and uniform for a distance of at least 200 feet.

112.–Stopping Freight Trains: The rapidity with which an application or release of brakes may change the slack, depends on the train speed and the amount of the brake application. On train speed, because the holding power of brakes is greater at low speeds than at high speeds, and on the amount of brake application, because the harder the brakes are applied, the greater the outward slack pull of the rear ones, which commence to release last. For this reason the slower releasing rear brakes are liable to cause a break-in-two when attempting to release at low speed, particularly if the reduction is heavy, yet will not produce any appreciable shock when a release is made at the higher speeds. Therefore, the lighter the reduction at any certain speed the less will be the slack action. The following instructions for stopping or slowing long trains are based on these two all-important facts; namely, that the higher the speed or the lighter the application, the lesser will be the slack action when applying or releasing brakes.

113.–Starting With Two Engines Double Heading: In starting a train with two engines double heading, commencing to use power at the same time will cause severe shocks and damage; therefore, the second engineer must not use power until the head engineer has started the entire train, or if unable to do so, needs assistance. To avoid rough handling with two engines double heading, braking must be done with more than usual care, due to the additional weight and slack at the head end and usually the extra length of train.

114.–Starting With Pusher Engine: With a pusher engine on the rear of train, the head engineer will, when the train is to be started, allow the pusher engineer to endeavor to start it. When he has done so, or, if unable to, the head engineer will then carefully assist. When train is being stopped, the pusher engineer will continue to use power lightly until the stop is completed to hold in the slack.

115.–Cutting Off Helper Engine: When a helper at the rear is to remain on the train until it is stopped just over the summit of grade and the engine will not drift freely enough to keep the slack in at the rear, the engineer should continue to use just enough power to insure it staying in. This is particularly important because if the slack is out and a heavy reduction is made from the head end couplers are liable to be driven in and cars damaged.

116.–Making Stop on Ascending Grade With Helper Engine: With a helper at the rear and a stop is to be made on an ascending grade the road engineer will gradually reduce the power position of the throttle and permit the slack to move in gently before making a brake application, avoiding a heavy reduction. Helper engine should use sufficient power to prevent slack running out. Very serious car damage will result if the helper engineer eases off and the road engineer continues to use power heavily, then shuts off and makes a heavy service reduction.

117.–Emergency Stops: When brakes apply at an emergency rate of reduction on a train assisted by a helper engine at the rear, the engineer on the helper will close the throttle immediately, apply sand and not reduce engine brake cylinder pressure unless there is a possibility of wheels sliding.

118.–The following procedure to stop an engine will govern in the event of loss of main reservoir air pressure and such engine or unit is in motion out of control.

(a) On engines equipped with dynamic or regenerative brake, proceed to apply dynamic or regenerative brakes as usual.

(b) On engines not equipped with dynamic or regenerative brake, or if dynamic or regenerative brake fails to slow down engine.

1. Move engine throttle to "Idle" position or controller to "Off" position.
2. On engines with manual or automatic transition move transition lever to No. 1 position or "Off" position as required by interlocks.
3. Operate reverse lever to reverse engine.
4. Move throttle to No. 1 position or main controller to the fourth position.

(c) Reversing traction motors to stop an engine otherwise out of control is the last resort when all other means have failed. Damage to traction motors and wheels may result if this is necessary at any appreciable speeds. Under no circumstances should reversing traction motors be resorted to as an aid to air brakes.

119.–Stopping When Power Is Being Used: When operating under power and conditions are favorable, a service brake application may be started on a freight train after the throttle of a diesel engine is reduced to position 5 or less. The engine brake must not be permitted to apply while using power. After the initial reduction is made, the throttle should be reduced gradually to a lower power position as the speed reduces and closed nearing the point of stop. A final reduction must be made to complete the last 100 feet of the stop – pressure must be exhausting from the service exhaust of the brake valve and the engine brake must be fully applied.

120.-Stopping With Power Shut Off: When power is shut off just before a brake application is made, it should be done gradually and ample time allowed for the engine and draft gear springs to drift in the slack as much as they will before the application is started. (On diesel engine the engine brake may be used to gradually close the slack.)

121.–Stopping With One Brake Application: At ordinary speed make each stop with one application, but with two reductions. Make the first reduction sufficient and at a distance to insure that it alone will, with no additional reduction prevent the engine from passing the objective point. (Take all chance on the side of stopping too soon.) The second reduction should be made and the engine brake fully applied to complete the last 100 feet of the stop.

122.–Amount of First Reduction: The amount of the first reduction should suit the speed of the train and the grade, and must not be less than 6 pounds nor over 12 pounds. For speeds of 15 miles per hour or less, use 6 to 8 pounds; above 15 miles per hour use as much less than 12 pounds as conditions will warrant. The objective sought is to have all slack action take place at the higher speeds, so as to insure that it will be gradual, and at the same time permit it to adjust itself, and then not to disturb it by further reductions. Avoid a total reduction of over 20 pounds if practicable.

There will be times, as on an ascending grade, where the maximum speed, at the time the first reduction would normally be made, will be so slow, say 6 to 8 miles per hour, as to give about the right time for the slack to run in and then run out again. This would cause exactly what should be avoided, as with the better holding power at the rear it would be liable to cause a break-in-two. The alternative is to shut off power enough earlier to drift to the very low speed where the reduction can be made within 100 feet of stop. By using the necessary care the independent engine brake can be used to bunch the slack carefully in advance of the automatic application, or even to alone make the stop. However, if the grade will cause the rear end to start back, the automatic application should be made or the independent brakes should be reduced in power at low speed and fully released just before stopped.

123.–Stops for Fuel or Water: Before taking fuel or water, engines of freight trains will be detached when in the judgment of the engineer he cannot make the stop without damage to equipment and contents of cars.

124.–Stops From Backing Movement: When stopping a long train while backing at moderate or low speed use a light reduction, keep the engine brakes from applying and gradually increase power as speed reduces. This will overcome the retarding effect of the brakes on the head end of the train and prevent slack from running out harshly. With diesel or electric engine, power must be shut off before train comes to a stop.

125.–Rear End Application: When a service brake application on a freight train moving forward is felt the engineer must gradually reduce the engine throttle, closing it when 100 feet from point of stop and fully apply the independent brake.

126.–Emergency Stops:

(a) In an emergency, move the automatic brake valve quickly to emergency position and leave it there until train stops. Use sand until train stops. In case brakes apply at an emergency rate of reduction from the train, move automatic brake valve to emergency position and gradually close the throttle and exercise care to prevent engine wheels from sliding. Apply independent brake about 100 feet before stop is completed.

(b) No attempt must be made to release brakes on a train following an emergency brake application until the train has stopped.

127.–An emergency brake application can be obtained with No. 6, 8, 24RL and 26L automatic brake valves regardless of position of double heading cock or cut off valve.

128.–Releasing Brakes – Freight:

(a) The most favorable conditions for releasing brakes are on trains standing, maximum main reservoir pressure and brakes almost fully applied.

(b) The most difficult condition for releasing brakes is when the brake pipe pressure is very low, as for example, when engine has been cut off for some time: recoupling a train which has been divided in two or more sections; after emergency brake applications; when brake pipe leakage is severe or after a light brake pipe reduction has been made.

129.–Releasing Air Brakes When Train in Motion:

(a) To obtain a satisfactory release of air brakes on a freight train, the brake valve must be positioned to provide for a continuous rise in brake pipe pressure. Speeds at which air brakes can be released satisfactorily on a long freight train in motion depends on grade conditions, how heavily brakes are applied and the time required for brakes to release. Normally the speed of a long freight train will be reduced as much as 15 miles per hour during the releasing operation. If the speed of the train continues to reduce and it is evident the train is going to come to a stop, a service brake application must be made and the engine brake fully applied. The release operation should not be started until at least 30 seconds following the last reduction of a brake application.

(b) A running release should not be attempted unless the brakes on all cars can be fully released before the speed has reduced to not less than 10 miles per hour.

(c) Under no circumstances after a slow down has been made should a release of brakes be attempted unless a total reduction of not less than 10 pounds has been made.

(d) A running release should not be made if the brake pipe reduction indicates excessive leakage and slack action is severe. Close throttle and permit train to come to a stop before releasing. A final reduction should be made about 100 feet from stop and engine brake permitted to apply.

130.–Releasing Air Brakes When Coupling Two or More Sections of Train: To release brakes after coupling two or more sections of train, following the coupling and before angle cocks are opened, a 25 pound brake pipe reduction must be made.

131.–Dynamic Braking: The dynamic brake of the engine must be used when conditions permit and when necessary in conjunction with train air brakes to reduce and control train speed.

(a) When applying dynamic brake, the throttle must gradually be reduced one notch at a time to idle position, a sufficient distance in advance of the point where speed is to be reduced. Wait about 20 seconds for train slack to adjust itself and then move transition lever to off position. Wait 15 seconds and then move transition lever to "B" braking position to close train slack. After train slack is completely closed, move transition lever gradually into the braking zone until the desired braking force has been obtained. To obtain maximum braking force, the transition level must be manipulated in a manner to obtain maximum amperage without overload. When train speed has been reduced to that desired, the transition lever should be graduated in accordance with the amperage required to maintain that speed.

(b) If train brakes are to be released while train is in motion, the dynamic brake should be held fully applied and the brake valve placed in running position. If needed, the use of the dynamic brake should be continued, following release of train brakes. If not needed, the transition lever should be moved slowly to "B" position and then to "OFF" position stopping in each position approximately 5 seconds before moving to Position 1.

(c) When using dynamic brake and train is to be brought to a stop, when train speed is reduced to a point where the dynamic brake becomes ineffective, the automatic or independent brake should be used to complete the stop. The brake application should be made simultaneously with the movement of the transition level to "OFF" position.

(d) When making an automatic brake application while in dynamic braking, the independent brake must be kept fully released to avoid sliding wheels.

(e) When using dynamic braking or regeneration to descend mountain grades of 1% or more a sufficient reduction of brake pipe pressure must *first* be made and *then* supplemented by dynamic brake or regeneration to control train speed.

132.–In order to insure proper release of brakes on trailing units on road engines after an automatic service application of brakes has been made, the independent brake valve handle must be held continuously in full depressed position.

133.–Brakes Sticking and Wheels Sliding:

(a) One cause for brakes sticking is failure to release, caused by attempting to release a lighter brake application than is authorized. Another cause for sticking brakes is a defective feed valve that allows the brake pipe pressure to fluctuate from time to time, or a feed valve that cannot regulate the pressure uniformly because of insufficient excess pressure, as a result of low governor adjustment or a governor defect, or by having less actual excess pressure than indicated by the gauge due to error in the gauge.

(b) Flat wheels on a freight car are the result of the brake remaining applied when the train is started. The trouble can be avoided if trainmen will inspect the brakes after train has started and apply the proper remedy by opening the release valve. If this accomplishes the release, then arrange to watch the offending brake to determine whether the sticking will be repeated. If the brake continues sticking, cut it out and make report on Form 975. If opening the release valve fails to release the brake, the train must be stopped and the cause located and corrected.

(c) If brakes are dragging, quickly inspect to see that hand brakes are released, retaining valve handle turned down, and that there is no continuous blow from its exhaust port. If the brake is still dragging, signal the engineer to stop. Note whether the brake releases from the engine after stop is completed. If so, proceed. If closing and opening the cutout cock quickly a few times or tapping the triple valve lightly does not stop the blow at the retaining valve exhaust, the brake must be cut out, auxiliary reservoirs drained and report made on Form 975. If the brake remains applied after draining reservoirs, inspect for brake levers fouled.

(d) In order to avoid sticking brakes on freight trains where yard engines couple or make up and couple the rear portion of a train, when rear portion has been assembled and coupled to the front portion, and before coupling air hose, inspector or trainman will signal engineer on yard engine to apply brakes. The engineer will then make a 25 pound brake pipe reduction. After the inspector or trainman has noted the brakes are applied on the rear portion handled by the yard engine, he will couple the air hose and open the angle cocks.

134.–Creep-on 6ET, 6DS, 6BL, 6SL, 14EL Modified Brake Equipment: A "creep-on" of engine brakes with this equipment is the result of a reapplication movement of the distributing valve parts caused by a light overcharge or excessive variation in pressure maintained by the feed valve. If it is suspected that the distributing valve parts are in a position to "creep-on" it may be determined while running or standing by placing the independent brake valve in slow application position until the brake cylinder gauge indicates 10 pounds and then returning it to running position, which should result in the engine brakes releasing immediately and be so indicated on the gauge. If engine brake does not release, the distributing valve parts are in a position to permit a "creep-on" and must be released by making a kick-off or a service brake application and release with the automatic brake valve. Do not use release position of the independent brake valve to release the brake after a "creep-on".

135.–Undesired Quick Action: The quick closing of the service exhaust port during a service brake application is an indication that undesired quick action has occurred.

136.–To locate a defective triple or control valve which causes undesired quick action of the brakes, the brake system must be fully charged. Trainmen or inspectors should then place themselves along the train about thirty (30) car lengths apart. Upon proper signal, the engineer will lap the automatic brake valve for ten (10) seconds, then make a service reduction of five (5) pounds followed by one (1) blast of the whistle or horn to indicate that the reduction has been made.

Trainmen or inspectors will then promptly inspect train to see whether each brake is applied. Upon finding a brake that is not applied, signal will be given to apply brakes. Engineer will then make a further reduction of eight (8) pounds. If the car with brakes not applied has a defective triple valve, the valve will go to emergency.

If defective triple is not located on the first cars examined, brake system should again be fully charged and trainmen or inspectors should station themselves along part of train not previously inspected and repeat above procedure on the balance of the train.

137.–When trouble is experienced due to undesired quick action of air brakes on line of road, the defective triple valve or control valve must be located if at all possible, the brake cut out and report made on Form 975.

138.–Use of Retaining Valves on Freight Trains: Before a train is operated down a grade requiring the use of retaining valves, it must be known that they are in such condition that the speed of the train can be safely controlled by the engineer. Retaining valves will be used at locations designated by the Time Table Special Instructions, and at other locations where, in the judgment of the engineer, their use is necessary.

Retaining valves must be turned up before starting descent. On heavy grades all available retaining valves should be used. When controlled by air brakes, and as soon as enough of the train has passed at low speed to the descending side of the grade to permit the application of brakes without stalling, a sufficient heavy reduction should be made to insure the brakes becoming effective and the average speed down the grade should be determined by the result of this test. The ability to control the train at all times should be assured by slowing down sufficiently or stopping and recharging if necessary. At no time should the speed by allowed to exceed that specified by Time Table Instructions. In cases of failure of the regenerative brake the train must be immediately brought to a stop.

HANDLING TRAINS ON GRADES

139.—Familiarity with steep grades, and the many deviations from safe practices that can occur so generally without an accident, tend constantly to develop habits which will eventually result in disaster.

Eternal vigilance is the price of safety on railroad grades. The force of gravity is always present and needs but a moment of forgetfulness to bring about a serious accident.

Some of the important facts relating to the control of trains on grades may be summed up as follows:

(a) The generative brake is not a safety device and Safety is paramount.

(b) The brake work required for a stop increase more rapidly than the speed. A train moving at 10 miles per hour is about four times as difficult to stop as a train moving at 5 miles per hour, and one moving at 20 miles per hour would be about 4 times as difficult to stop as one moving at 10 miles per hour, etc.

(c) A certain portion of the holding power is required to prevent a gain in speed.

(d) The holding power obtained from a certain brake shoe pressure always decreases as the speed increases.

(e) Brake cylinder leakage tends to increase the distance and time required to make a stop.

(f) The application of brakes heats brake shoes and treads of wheels. As heat increases, friction decreases, therefore the holding power of the brake is correspondingly reduced.

(g) The efficiency of the brakes as indicated by the first few applications after beginning the descent while the speed is low, must be the determining factor as to whether the maximum speed allowable for that grade should be attempted with that train.

(h) A fully charged automatic brake system represents the maximum of safety obtainable, therefore if trains are stopped on heavy grades, they should be held by hand brakes to permit the engine to keep the train charged. When hand brakes are once applied, under no circumstances should they be released until the engineer whistles for release of brakes.

(i) A train should not start the descent of a grade until the train brake system is fully charged.

(j) Recharging can be accomplished more quickly when main reservoir pressure is high. To recharge, running position of the brake valve should be used.

(k) The shorter the time required for charging and reapplying the brakes, the greater will be the value of the retaining valve.

140.–Before descending mountain grades, as designated by time table instructions, the engineer must adjust feed valve to 90 lbs. and recharge to this pressure. It must be known that the compressor or compressors are working properly, that brakes are operative throughout the train, and that the train is fully charged.

141.–Use of Independent Brake: When controlling trains on descending grades the use of the engine brakes must be limited to the temporary control of train slack. They must not be used for speed control except in cases of emergency. To carry out the instructions concerning the non-use of engine brakes on grades the engineer will either prevent the engine brakes from applying or immediately after making an automatic brake application, completely release the engine brakes with the independent brake valve.

142.–Changing From 90 lbs. to 80 lbs. Brake Pipe Pressure: When the first stop is made after reaching foot of mountain grade, reduce brake pipe pressure to 65 lbs., adjust feed valve to 85 lbs., recharge brake pipe to 85 lbs., make a second reduction of 25 lbs., adjust feed valve to 80 lbs., recharge brake pipe to 80 lbs., make a third reduction of 25 lbs. and release.

143.–Short Cycle Method of Grade Braking, when Retaining Valves are in Use: Frequent application and release of brakes without allowing sufficient time to recharge the auxiliary reservoirs to standard pressure, reduces the brake efficiency and must be avoided, but in handling trains on descending grades in order to maintain a uniform speed, application and release of brakes should be made as often as necessary.

In handling freight trains on descending grades with air brakes, it is desired that the short cycle one reduction method should be used and must be operated as follows:

After leaving summit of grade make two or three applications at low speed to determine the holding power of the brakes, and to get retaining valves into operation, then allow the train to attain the desired speed. When the desired speed has been attained and the brakes have been applied they should be released just at the instant the train starts to slow down. Immediately before releasing, the pressure on brake pipe gauge should be noted. Just before the train starts to gain speed, one reduction of brake pipe pressure should be made, bringing the brake pipe pressure down to where it was immediately before the previous release. After brake valve exhaust ceases, and the train is about to slow down again, the brake pipe pressure should be noted and release made as before.

This operation should continue until the foot of the grade is reached, the speed of the train being kept low enough to permit restoring on each recharge the amount of air used on the previous application.

The brake pipe reductions for controlling the train in this manner should not be less than 7 pounds. If it is found that reductions of more than 15 pounds are required to control the train promptly, or if it is found that the train speed increases too rapidly during the recharge to allow sufficient time to recharge the brakes to standard pressure, the train must immediately be brought under full control and a lower maximum speed maintained.

144.–Holding Engine and Train When Standing: The air compressor or compressors must be working and the independent brakes fully applied or in PARKING position, if independent brake valve so equipped; also when leaving the engine unattended.

The engine brakes, or hand brakes must be used for holding a train which is stopped on a grade, thereby permitting the immediate release and recharge of the train brakes. The engine brakes alone will hold a heavy train on a steep grade, if the position of the slack is such as to prevent any cars from starting after the train is stopped; for example, (a) on an ascending grade, drift near the stop, then draw out all slack by stalling with moderate use of power, and apply the engine brakes as soon as stopped, but not an instant sooner; or (b) on a descending grade, close all the slack in, by use of the engine brakes.

PASSENGER TRAIN HANDLING

145.–Starting and Slacking: Starting quickly, slipping drive wheels, taking slack harshly or starting quickly after slacking will cause shocks that are disagreeable to passengers and damaging to equipment. To avoid these, throttle must not be opened until brakes are released. When opening the throttle it must be done gradually, particularly during short movements and when taking slack. After a slowdown and release, throttle should not be advanced until brakes are fully released. When necessary sand should be used to prevent drive wheels from slipping.

When failure to start requires taking the slack, (a) close the throttle; (b) apply the independent air brake; (c) reverse the engine; and (d) release the independent brake. Use such power as necessary to close in all train slack.

If the train must be backed to a more favorable place for starting, before reaching the point where stop is made and while still working power, make a brake-pipe reduction of 6 to 8 pounds. Continue to work power moderately until the stop is completed so as to have all slack closed in. Reverse the engine, start release of the brakes and when rear brakes have released, promptly use power, but carefully so as to avoid damaging shocks.

146.–Controlling Train Slack: Smooth handling of passenger trains requires that slack must never be changed suddenly. The action of the brakes in changing the slack will be most severe at low speeds. Therefore, avoid any heavy reduction when speed is low. As the heavier the reduction the rougher will be the slack action, use the "split-reduction" method when commencing other than light applications. To help avoid objectionable slack action while applying the brake on trains of more than 9 cars, where conditions require, continue the use of sufficient power to hold the slack stretched while the brakes are being applied.

147.–Split-Reduction: The "split-reduction" consists of dividing into two reductions, with little interval between, a number of pounds that if drawn off in one continuous reduction would cause harsh slack action. While a reduction is being made, the brakes nearest to where the brake pipe air is discharging apply earlier and heavier than those farther away. This difference becomes greater the heavier the reduction and longer the train. In stops, moving ahead, this runs the slack in, and compresses the coupler springs. When the reduction is completed it will be the same throughout the train, causing the rear brakes to increase in holding power to that of the forward brakes. The lesser holding power of brakes near the head end, those on the engine baggage and mail cars, and the compressed coupler springs will then run the slack out, heavily or gently, depending on the amount of the continuous reduction.

For example, if a reduction of 10 pounds is desired, draw off 7 pounds and then add 3 pounds more as soon as the slight slack run out from the 7 pounds is felt. The first portion of the reduction must not exceed 7 pounds. While stops will be made in somewhat less time by applying the brakes heavier at the start, and while this permits of lower braking force near the stop, yet even a "split-reduction" must not total enough to cause any rough handling. This will require still lighter reductions at lower speeds.

148.–Graduated Release: Graduated release consists of releasing the train brakes in steps of graduations, as can be done with UC, D22 or 26C equipment. It is accomplished by increasing the brake pipe pressure enough to move the triple valve parts to release position, then stopping the flow of air into the brake pipe by lapping the automatic brake valve. The triple valve parts then move back to lap position and stop the release. The nearer the brake pipe pressure is restored to the standard carried, the more of the brake cylinder pressure will be discharged.

In making stops from usual speeds it is desirable to make an application heavy enough but not unduly severe, to avoid taking unnecessary time to stop. If such an application were held, an accurate stop could not be made, wheels would be more likely to slide and a harsh stop would result. Graduated release permits avoiding these undesired features without loss of time. To brake successfully observe the air gauge.

149.–Stopping With Graduated Release: Graduated release, as obtained with UC, D22 or 26C equipment, will be used on all passenger and suburban trains. At other than low speeds make the graduated release stop as follows: While working power make a reduction of about 12 or 15 pounds depending on speed and grade, using the "split-reduction". Then gradually reduce the throttle as required. Make this application so as to have the speed down to 12 or 15 miles per hour when about 400 ft. from the stopping point. Then, by two or three graduated releases (partial releases), complete the stop so as to have but light holding power or none, as required by "pre-release" instructions when the train has stopped. Throttle must be in closed position when approximately 100 feet from point of stop.

Graduated release is accomplished by moving the automatic brake valve handle alternately from lap to running position and then back to lap. The length of time to remain in running position depends on the length of the train and reduction in holding power desired. If handled properly, the brake pipe gauge pointer will show an increase of 4 pounds for each graduation and not less than 2 pounds for the lightest graduation.

Do not attempt to make further graduated releases after brake pipe pressure has been restored to within 5 pounds of standard. Avoid graduating the brakes off sufficiently to necessitate a reapplication at low speed as to do so will cause a severe shock. If it is seen that a reapplication will be required first make a complete release and then reapply carefully. Where a low speed stop is required do not attempt a graduated release unless, the brake pipe pressure has been reduced more than 10 pounds.

150.–Stopping, One-Application Method: When making stops at slow speeds, make the first reduction 5 or 6 pounds.

151.–Slow Downs: While still working power, make a brake pipe reduction of about 7 pounds. After the service exhaust closes follow by further reductions as required to obtain the desired low speed. To insure a prompt and certain release of all brakes the reduction must total not less than 10 pounds before attempting to release. If less, add the needed amount just before releasing but do not release before the service exhaust ceases. When slowdowns are made for railroad crossings the speed should be reduced sufficiently so that the brakes can be completely released before passing over the crossing.

152.–Braking at Curves: When making a brake application to reduce speed on a curve the application should be started sufficiently in advance of the curve to effect a release of brakes as the engine enters the curve.

153.–Direct Release: To release passenger train brakes (does not include partial releases with graduated release equipment) move automatic brake valve handle to running position. A release should not be attempted without a further brake pipe reduction unless the pressure has been reduced at least 7 pounds below the standard carried for a train of less than 9 cars and 10 pounds for longer trains.

154.–Pre-Release: Pre-releasing is starting the release of the train brakes just enough before the stop is completed that they will be almost off at the stop so as to avoid the shock that will follow holding a more or less heavy application until stopped. It may be used with any brake equipment under the following limitations:

Trains of 9 cars or more must be brought to a stop before brakes are released. If the reduction is less than 10 pounds increase to that amount after stopped before releasing.

Trains of less than 9 cars may have brakes released just before stopping if the reduction is at least 7 pounds. If less than 7 pounds, hold the brakes applied until stopped, then increase to 10 pounds before releasing.

155.–Stopping-Backing Train Movement: When making a short backing movement with a passenger train, such as through crossovers, out of siding, etc. operate engine and brake as outlined in Rule 145. When making a backing movement in which the back up hose or its equivalent may or will have to be depended upon for control, test of brakes must be made as outlined in Rule 54.

156.–Spot Stops: When making "spot" stops, handle the train the same as for ordinary station stops, except have the brakes fully released and the speed at about 5 miles per hour when two or three engine lengths from the stopping point: then make a light application soon enough to get the brake shoes against the wheels before the final one or two small reductions are needed to complete the stop.

The independent brake valve alone should not be used in making "spot" stops when the train brakes are cut in and operating. Emergency application of brakes must not be used on any train for making a "spot" stop.

157.–Depleting Brake Pipe Pressure on Passenger Trains: Where service conditions require the brake pipe pressure to be reduced to zero before the engine is detached from a passenger train or a cut made in the train, the engineer will immediately, after stop is made, place the automatic brake valve in service position and leave it there until the brake pipe pressure is depleted.

158.–Use of Retaining Valves on Passenger Trains: Use retaining valves on UC, 26C or D-22 equipment trains whenever requested by the engineer. These valves must be used on descending grades where it is necessary to hold brakes applied while recharging and to control train slack. When the retaining valve handle points downward all brake cylinder air is exhausted when releasing and recharging. When the retaining valve handle points outward a certain amount of air is retained in the brake cylinder while recharging.

REFERENCED PHOTOS LOCOTROL EQUIPPED ENGINES

LEAD UNIT OPERATING CAB

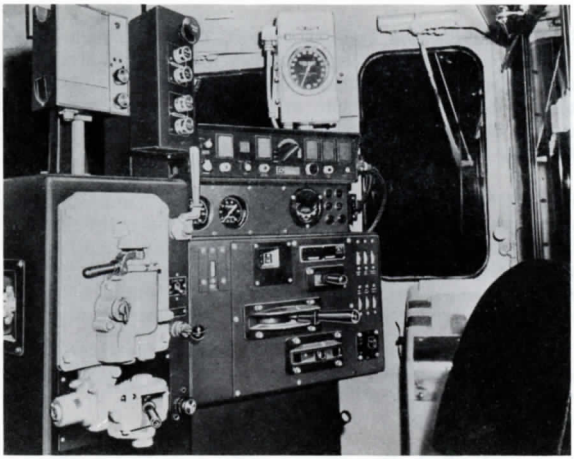

MASTER UNIT NOSE

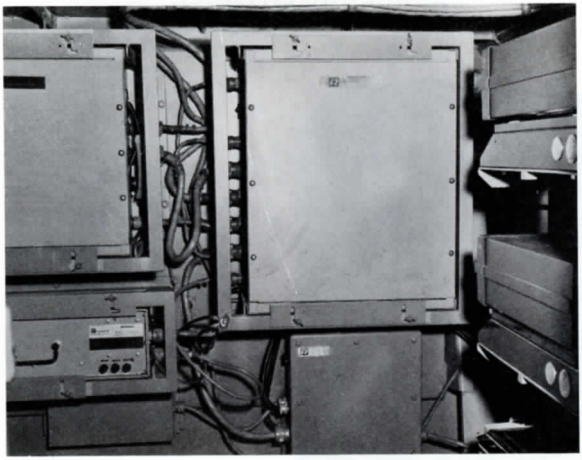

CONTROL CONSOLE ASSEMBLY

AUTOMATIC & INDEPENDENT BRAKE SWITCH PANEL

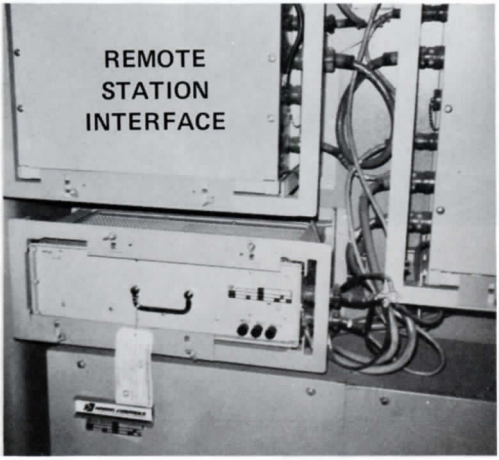

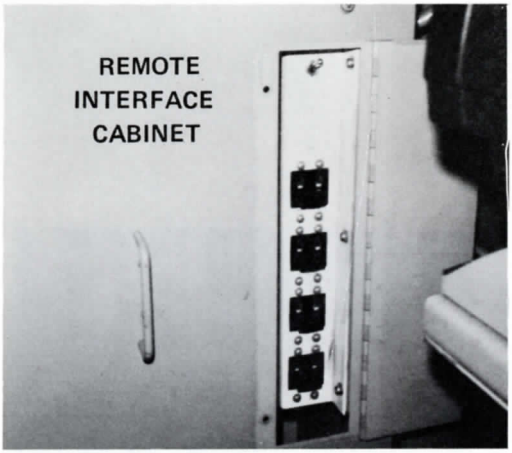

"REFERENCE PHOTOS LOCOTROL"
EQUIPPED ENGINE

OPERATING INSTRUCTIONS FOR LOCOTROL EQUIPMENT

159.–Push-Button Brake-Control Console:

(a) **Emergency Brake Button (EBA):** Pushing this button causes an emergency brake application throughout the entire train. Emergency is *always available with this button.*

(b) **Automatic Brake Application Button (ABA):** Pushing and releasing this button the first time causes a minimum service reduction (5 psi). The longer the button is pressed after the initial minimum reduction, the greater the reduction will be. *(Watch the equalizing reservoir gauge for desired reduction.)*

(c) **Automatic Brake Release Button (ABR):** Pushing this button will cause an automatic brake release.

(d) **Independent Brake Application Button (IBA):** This button will apply the independent brake on both lead and booster units in graduations, depending upon how long the button is held in.

(e) **Independent Brake Release Button (IBR):** This button will release the independent brakes on both the lead and booster units. By pushing this button, a service reduction of the automatic brakes can be released on both lead and booster units.

IMPORTANT: The independent brake valve handle may also be used independently of the Locotrol-Booster independent brake; this providing independent brakes on the lead units only.

160.–Mode Selector Switch: This switch has 11 positions and they are as follows:

ISOLATE–This position isolates the Booster unit's throttle and brake systems with the exception of Emergency (EBA) and alarms.

IDLE–In this position the Booster units will respond to brake commands from the lead, but all throttle commands, both motor and dynamic braking, will be isolated.

MU–In this position both lead and Booster units are synchronized, and the Booster units will respond to both throttle and brake commands.

THROTTLE–POS. 1–8: The Booster unit may be loaded from 1 through 8 throttle positions, independent of the lead unit, provided the lead unit's throttle is in any position other than idle and independent motoring is cut in. These positions may also be used to independently control the degree of dynamic braking on the Booster unit when the lead unit is being operated in dynamic braking.

161.–Independent Motoring Button: When this button is depressed, it permits the operator *to operate the booster units in a motoring throttle position,* while operating the lead unit in a dynamic braking or motoring condition.

Lead unit must be in motoring No. 1 throttle position or above. Control console Mode Selector Switch must be in No. 1 position at the time Independent Motoring Button is depressed. At this time, a red indicating light will be displayed on control console marked, "MOTORING." Desired Booster throttle position now can be initiated.

162.–Air Brake Feed Valve Switch; This switch has two positions – OUT and IN – and controls the Booster unit's feed valve. With the switch cut "IN," the Booster unit's feed valve is cut in and will help to charge a portion of the train.

To CUT IN the Booster unit feed valve, the following procedure must be observed:

1. Move Mode Selector Switch to "MU" or "IDLE" position.
2. Move Air Brake Feed Valve Switch to "IN" position.
3. Push Automatic Brake Release Button (ABR). When the feed valve is in, a GREEN indication "IN" will be displayed on the console. (If feed valve drops out, a YELLOW indication "OUT" will be displayed on the console.)

(Note: It is important that the above procedure be followed in the sequence as outlined or feed valve will not be cut in.)

To CUT OUT the Booster unit feed valve, the following procedure must be observed:

1. Move Air Brake Feed Valve Switch to "OUT" position.
2. Move Mode Selector Switch to "ISOLATE" position.
3. Wait for feed valve "OUT" indication to be received on control console.

(Note: It is important that the above procedure be followed in the sequence as outlined, or feed valve will not be cut out.)

163.–Console Dimmer Switch: This switch has two positions – BRIGHT and DIM – and controls the intensity of lights on both the brake and control console.

164.–Sand Switch: This switch has two positions – OFF and ON – and when "ON," will sand the Booster unit in the direction in which it is traveling. The "ON" position is indicated by a yellow flashing "SAND ON" light at the upper left of the control console. When a wheel slip condition is present in the Booster consist, the wheel slip indicator will light, and alarm buzzer will sound. The audible alarm will remain activated until Sand Switch is placed in the "ON" position, or the wheel slip condition is corrected.

165.–Console Power: This switch has two positions – OFF and ON – it must be turned "ON" at all times when operating as a Locotrol-Lead unit. When turned "OFF," both Locotrol power and brakes on the Booster unit are isolated and the push-button air brake equipment on the lead unit is nullified.

166.–Alarm Reset: Whenever an alarm condition occurs on the Booster consist due to ground relay action, hot engine, low oil pressure, P.C. application or engine being shut down, an alarm bell will ring and a red light will be lit at the lower right-hand corner of the control console. By pushing the reset button, the bell will stop ringing. The light will continue to be lit, however, until the condition on the affected unit is corrected.

167.–Ground Relay Reset: Remote reset – do not reset more than three (3) times.

168.–Automatic Over-Ride: This feature is used for passage through areas where continuity may be lost. The Booster units will remain in the throttle position (either motoring or dynamic) that existed at the time of continuity loss and will remain in that position until continuity is regained. Any brake application made during the loss of continuity (or after time has elapsed on the over-ride feature) will throttle the Booster unit back to idle and the Booster unit feed valve will be cut out.

169.–IBA Light: This red light will be lit whenever an automatic or independent brake application is made on the Booster consist, causing 5 psi or more brake cylinder pressure.

170.–BW Light: Anytime a dynamic brake overload exists on the Booster consist, this light will be lit.

171.–Alarm Light: Will light if on Booster consist a hot engine, low oil, no power, P.C. or ground relay condition develops.

172.–Continuity or No Continuity Lights: These lights indicate whether continuity exists between lead and Booster units and whether the radio control equipment is functioning normally. A loss of continuity for 45 seconds or more will result in the Booster unit going into over-ride. (See Automatic over-Ride) This will also result in the red "NO CONT" being displayed.

173.–Lead-Radio-2 and Booster-Radio-2 Lights: These lights indicate whether the lead unit or booster unit is functioning on the regular radio or on the standby radio. This is a normal operating procedure and requires no action on the part of the Engineer.

174.–XMIT Light: This light will be lit briefly during transmitting cycles. This is a normal operating procedure and requires no action on the part of the Engineer.

175.–Air Brake Train Test and Leakage Test:

1. Place the Mode Selector Switch on the lead control console to "IDLE" position.

2. Depress the "ABR" push-button on the air brake control console. Trainmen or Car Inspector *must advise Engineer when brake pipe pressure begins to increase on caboose. This will insure that all brake pipe angle cocks are open.*
3. Place the Feed Valve Switch to "IN" position and again depress "ABR" push-button on the air brake control console.
4. After the air brake system is charged to the required pressure, the Engineer must depress the automatic brake service application button "ABA" and make a 15 psi brake pipe reduction.
5. After the 15 psi brake pipe reduction is completed and the service exhaust ceases, turn the Feed Valve Switch on the control console to the "OUT" position. Turn the Mode Selector Switch to the "ISOLATE" position, then depress the cut-off valve handle and turn it to the "OUT" position. Wait 45 seconds and then observe the brake pipe gauge and time the brake pipe leakage for one minute. (NOTE: "Feed Valve Out" indication light must be lit.)
6. a. After the brake pipe leakage test, depress the "ABA" button and reduce the equalizing reservoir pressure below the brake pipe pressure – *but not to exceed 3 psi.*
   b. Move the brake valve cut-off valve to "FRT" position.
   c. Depress the "ABA" button until a full service brake pipe reduction is obtained.
   d. Brake Valve cut-off valve *must* be in the *"OUT" position* until the air *brake inspection is completed* and release signal is received. (NOTE: The above procedure must be followed in the sequence as outlined.)
7. When notice is given to release the train brakes the following procedure must be followed.
   (a) Turn the locotrol console switch to the idle or MU position.
   (b) Turn the feed valve switch to the "IN" position.
   (c) Depress the "ABR" button (Feed valve "IN" light must be lit). The feed valve on the lead unit *must not* be cut in until the brake pipe pressure on the lead unit has shown a significant increase.
   (d) After a significant increase of brake pipe pressure has been noted, move the cut-off valve on the lead unit to "FRT" position and depress the "ABR" button.
8. After brakes are released, the train is ready for departure.

ROAD OPERATION

176.–Stopping Train To Set Out or Pick Up Cars:

(a) When stopping on line of road to pick up or set out, or cut off train for any reason, it is absolutely essential that the "FOR-REV" lever be placed in neutral, independent brakes released by pushing the IBR button and the Air Brake Feed Valve on the Booster unit be *cut out* and the Booster unit isolated before cutting off from the train. KEEP IN MIND that control of both engine power and brakes on the Booster units are still subject to control from the lead unit, even if the lead units are not physically coupled to the rest of the train. The Mode Selector Switch must be kept in "ISOLATE" position.

(b) Engineer will center the reverser, release independent brake by pushing "IBR" button, and then make a full service brake application by pushing "ABA" button.

(c) When service exhaust ceases, engineer will move "FEED VALVE SWITCH" to "OUT" position and place "MODE" selector switch in "ISOLATE" position. Note that feed valve "OUT" indication is displayed.

(d) Then the engineer will sound one long blast with air horn to signal trainmen to close angle cock at the rear of the last car, where cut is being made.

(e) After the trainman receives proper signal from the engineer, he will close the angle cock on rear of the last car of the cut being moved. After giving proceed signal, allow the remaining portion of the train to go into emergency making sure the angle cock on the remaining portion of the train is left in fully open position.

(f) After uncoupling, the engineer will note that the "PC" and "IBA" lights are displayed on the console. If a "PC" indication fails to appear on the console, no further movement will be made until it is ascertained that the rear portion of the train is in emergency and the "MODE" selector switch is in "ISOLATE" position.

(g) After the entire train is reassembled, the Feed Valve on the booster unit will be cut in for the release test. The Feed Valve on the lead unit must not be cut in until the brake pipe pressure on the lead unit has shown a significant increase.

(h) Setting out or picking up cars behind the booster unit can be accomplished by using standard railroad procedure.

177.–Emergency Stops:

(a) When a train is stopped suddenly by an emergency application from any cause, move the feed valve switch to "Out" position and mode selector switch to "Isolate" position. No action will be taken to recover the "PC" on the booster unit until the train has been inspected and the engineer is so advised.

(b) When it has been determined that the train is intact and trainline continuity is established, between front and rear of train, and the engineer is so advised, the booster unit feed valve may be cut in.

(c) If the train is separated by any unkown cause between the lead unit and the Booster unit, the feed valve on the Booster unit must be cut out and angle cock left fully open on the rear section of the train until the train is recoupled.

(d) If an emergency brake (P.C.) application occurs, move the throttle to "IDLE" position; depress "ABA" button until equalizing reservoir pressure is completely depleted. (Hold button in for an additional 10 seconds.) Depress "ABR" button and observe that equalizing reservoir and brake pipe air are being restored.

178.–*The automatic brake valve handle must be locked in running position because a penalty application of the brakes will result if the handle is moved with the console control cut in.*

179.–*If no braking response is obtained from the push-button console, and time permits, turn the console power switch on the control console to the "OFF" position; then operate the automatic brake valve manually. If in doubt as to available time, press "Emergency" button on brake console.*

180.–If a penalty brake application occurs (deadman or when conventional automatic brake valve is used) with Locotrol in operation;

(a) Place feed valve switch on Locotrol control console in the "OUT" position.

(b) Place Mode Selector Switch on control console in "ISOLATE" position.

(c) Place Locotrol console power switch in "OFF" position.

(d) Place Automatic Brake Valve in "EMERGENCY" position and leave it there one minute.

(e) Note: – Throttle must be in "IDLE" position.

(f) Place Automatic Brake Valve in running position. After brake pipe is recaptured, lock automatic brake handle in running position.

(g) Place Locotrol Console Power Switch in "ON" position.

(h) Place Mode Selector Switch on control console in "MU" position.

(i) Place Feed Valve Switch to "IN" position and press "ABR" button to cut in the feed valve on Booster unit.

SWITCHING OPERATION

181.–Setting Out Cars Using Switch Engine:

(a) If a Switch engine is used to switch the train from the head portion, when the Booster units will remain in the portion not switched, handle as outlined under Rule 176.

(b) If a switch engine is used to switch the rear portion of the train which includes the Booster units, the Engineer on the lead units must place "FOR-REV" lever in "NEUTRAL" position, then release Booster independent brake by depressing "IBR" button; at this time set manual independent on lead unit, then turn the Feed Valve Switch to the "OUT" position and the Mode Selector Switch to "ISOLATE" position.

ARRIVAL AT TERMINAL WHERE OUTBOUND CREW IS NOT ON DUTY OR UNITS ARE TO GO TO THE HOUSE

182.–(a) Place the "FOR-REV" lever in "NEUTRAL" position.

(b) RELEASE the independent brakes on the Booster units by depressing the "IBR" push-button, set manual independent brake on lead unit.

(c) Place the Feed Valve Switch on the control console in the "OUT" position.

(d) Place the Mode Selector Switch on the control console in the "ISOLATE" position.

(e) Place *all* switches on the control console in the "OFF" or "OUT" position.

(f) Remove the locking device on the automatic brake valve handle.

(g) Proceed with conventional operation of the locomotive.

LOCOTROL FAILURE

183.–If the locotrol fails to operate properly you must proceed as follows:

(a) Lead Unit.

1. Place "For-Rev" lever in "Nuetral" then move mode selector switch to "Idle".
2. Press "Ind-Rel" button on air brake control console. Manually apply independent brake valve.
3. Turn Feed Valve switch to "OUT" position.
4. Turn Mode selector to "Isolate".
5. Turn Console Power switch to "OFF".
6. Open circuit breaker or pull fuses located in the low voltage distribution cabinet.
7. Remove lock handle from automatic brake valve.

(b) Booster Unit.

1. Open circuit breaker or pull fuses located in the low voltage distribution cabinet.
2. Turn locotrol air valve on nose wall to "cut out" position (Booster unit only).
3. Remove lock handle from automatic brake valve.
4. Place cut off "Feed Valve" in "OUT" position.
5. Switch Booster units to the head end and operate in conventional multiple unit service.

SPECIAL RULES AND INSTRUCTIONS FOR MECHANICAL DEPARTMENT FORCES

200.–Standard Air Pressures: Air pressure regulating devices must be adjusted for the following pounds per square inch (PSI):

(a) Cars

1. Car Water Raising System
   Governor Valve 60 PSI
   Reducing Valve 20 to 30 PSI
2. Safety Valves
   AB-1-B, ABD-1-B, D-22 and 26C brake equipment 58 to 75 PSI

   Caboose (Brake Cylinder Line) 28 to 30 PSI

(b) Yard Facilities

1. Yard Brake Pipe Pressures

Yard Charging and Test Facilities . . . . . (Frt. Trains)	10 PSI Less than prescribed brake pipe pressure for trains being tested.
Yard Test Plant . . . . (Passenger Trains)	Standard brake pipe pressure prescribed for trains being tested.

201.–General Rules – Engines:

(a) Air brake and hand brake equipment on engine must be inspected and maintained in accordance with the requirements of the Locomotive Inspection and United States Safety Appliance Acts and related orders and regulations of the Federal Railroad Administration.

(b) Air Compressors: Air compressor or compressors must be tested for capacity by orifice test as often as conditions require but not less frequently than required by Federal Railroad Administration.

(c) Compressor governor, when used in connection with the automatic air brake system, must be so adjusted that the compressor will start when main reservoir pressure is not less than 15 pounds above the maximum brake pipe pressure fixed and will not stop the compressor until the main reservoir pressure has increased not less than 10 pounds.

(d) Main Reservoirs: Main reservoirs must be subjected to periodic tests as required by the Federal Railroad Administration except welded reservoirs drilled with telltale holes.

(e) Air Gauges: Air gauges must be tested periodically as required by the Federal Railroad Administration and when any irregularity is reported. They must be compared with an accurate dead weight tester or test gauge. Gauges found inaccurate or defective must be repaired or replaced.

(f) All operating portions of air brake equipment, together with dirt collectors and filters, must be cleaned, repaired and tested as often as conditions require to maintain them in a safe and suitable condition for service, and not less frequently than required by the Federal Railroad Administration.

(g) Main Reservoir Leakage: After reducing main reservoir air pressure 40 percent below maximum pressure, main reservoir and related piping leakage shall not exceed an average of 3 pounds per minute in a test of three minutes duration.

(h) Brake Cylinder Leakage: With a full service application of brakes, and with communication to the brake cylinders closed, brakes must remain applied not less than five minutes.

(i) Foundation Brake Rigging: Foundation brake rigging and safety supports, where used, must be maintained in a safe and suitable condition for service. Levers, rods, brake beams, hangers and pins must be of ample strength and must not bind or foul in any way which will affect proper operation of brakes. All pins must be properly applied and secured in place with suitable locking devices. Brake shoes must be properly applied and kept approximately in line with treads of wheels or other braking surfaces. No part of the foundation brake rigging and safety supports shall be less than 2½ inches above rails.

(j) When engines are placed in Enginehouse and diesel engine is to be shut down, place and leave automatic brake valve in SERVICE position until brake pipe pressure is reduced to zero. After wheels have been blocked, main reservoir drain cocks, automatic drain valves, and filter drain cocks must then be manually opened and left open until compressors have again been started and condensate worked out.

1. Automatic drain valves must be known to be operating properly prior to dispatching of engines from points where maintenance facilities are available.

202.–All engines or engine consists must be tested as prescribed by Rule 203 prior to being dispatched for service as well as the lead unit of an engine consist that has been changed enroute.

203.–Engine Terminal Air Brake Test:

(a) Check the following items before commencing tests:

1. Angle cocks and cutout cocks are in proper position between engine units.
2. All units in consist must be equipped with a full complement of MU hoses and coupled.
3. Equipment is fully charged.
4. Main reservoir pressure 130-140 PSI.
5. Brake pipe pressure as prescribed in Rule 1 B.
6. Generator field switch is OFF.
7. Hand brake is applied or wheels blocked.

(b) Application and Leakage Test: Make a 10 PSI brake pipe reduction with automatic brake valve. Move automatic brake valve handle to LAP position. With 26L equipment, move brake valve cut off valve to OUT position and note:

1. Brakes apply.
2. Brake pipe leakage does not exceed 5 PSI per minute.
3. Brake cylinder gauge reads 10-25 PSI.

(c) Depress independent brake valve handle for five seconds per unit for each unit in the consist, and note brakes release on all units.

(d) On 26L equipped engines move automatic brake valve cut off valve to IN position and make an additional 15 PSI brake pipe reduction and note brakes apply.

(e) Move throttle to No. 3 position and move automatic brake valve handle to EMERGENCY position and note:

1. Brake pipe pressure reduced rapidly to zero.
2. Brake cylinder pressure builds up at a rapid rate.
3. PC switch has operated and light is lit.
4. Engines RPM reduced to IDLE.

(f) Depress independent brake valve handle and note brakes release. Note brakes reapply when handle is raised.

(g) After recovering brake control (approximately 2 minutes) move throttle to IDLE, move automatic brake valve handle to RELEASE position and note:

1. Brake pipe pressure restored to normal.
2. PC switch has reset and light has gone off.

(h) Move independent brake valve handle to FULL APPLICATION position and note brakes apply.

(i) Move independent brake valve back to RELEASE position and note brakes release.

(j) If (LOCOTROL) radio controlled engine equipment is to be used see Rule 205 & 206 before leaving Shop or Engine House track.

(k) Engines equipped with safety controls must have the safety control feature tested and operational before leaving shop or engine house track.

CONDITIONING AND TESTING OF LOCOTROL UNITS AT MAINTENANCE POINTS

204.–CONDITIONING ON ARRIVAL (terminating Yard)

(Lead Unit)

1. Foreman will condition Locotrol Console as follows:
   a. Place "FOR – REV" lever in "NEUTRAL," then move Mode Selector Switch to "IDLE."
   b. Press "IND. REL." button on air brake control console. Manually apply independent brake valve.
   c. Turn Feed Valve Switch to "OUT" position.
   d. Turn Mode Selector to "ISOLATE."
   e. Turn Console Power Switch to "OFF."
2. Switch off all circuit breakers on interface relay cabinet in nose and lock.
3. Remove lock handle from automatic brake valve.

(Booster Unit)

4. Switch off all circuit breakers on interface relay cabinet in nose.
5. Turn Locotrol air valve in nose to "CUT–OUT" position (Booster unit only) and lock nose door.
6. Set independent brake valve. Remove lock handle from automatic brake valve.
7. Inspect and perform necessary maintenance on both units.

205.–CONDITIONING FOR DEPARTURE (BOOSTER UNIT) TEST

1. Move units Lead and Booster to outside test track knuckled together in direction of departure with trainline air hose coupled. If Booster consist has additional units, couple units to Locotrol Booster in conventional manner.

2. If there are trailing units behind the Booster, condition the air equipment for a trailing movement. *Be sure to remove automatic brake handle and place independent handle in running position.* Place *all* switches on engineer's control panel to "OFF" position. Turn off all lights and voice radio. In winter operation, place cab heaters in "MEDIUM" position.

3. Enter Booster unit. Unlock nose door. Position Directional Run Switch. If lead and Booster units are headed in same direction, position switch to "SAME." If lead and Booster units are operating in opposite direction, position switch to "OPPOSITE."

4. Position all four circuit breakers (in nose of Booster) to the "UP" or "ON" position.

5. Position Locotrol air valve cut-out cock on Booster unit to "CUT IN" position.

6. Lock nose door in Booster unit.

7. Position Locotrol circuit breaker on isolation panel to "UP" or "ON" position. Units equipped with fuses instead of circuit breakers must have fuses properly inserted. The fuse clips are located in low voltage distribution cabinet.

8. Position Control and Fuel Pump Combination Switch to 'UP" or "ON" position on engineer's control stand. *All other switches to be in "OFF" position.* Position all light and voice radio switches to "OFF" position

9. Position *automatic and independent handles in running position. Lock automatic brake valve handle.*

10. Position brake pipe cut-out valve to *"FRT" position.*

11. Place MU-2A valve in *"Lead or Dead" position.* Check feed valve pressure (must be 90 PSI).

206.–CONDITIONING FOR DEPARTURE (LEAD UNIT) TEST

1. Unlock cover to interface cabinet in nose and position the two circuit breakers to "UP" or "ON" position.

2. Position Locotrol console switches for shutdown (counterclockwise position).

3. Position Locotrol circuit breaker on isolation panel in cab to the "UP" or "ON" position. Units equipped with fuses instead of circuit breakers must have fuses properly inserted. The fuse clips are located in low voltage cabinet.

4. Position automatic brake valve in running position and lock. *Make sure independent brake valve is set.*
5. Position automatic brake valve cut-off to *"FRT" position.*
6. Position MU-2A valve to the *"Lead or Dead" position.*
7. Position Locotrol Console Power Switch to the "ON" position. Set Mode Selector to "IDLE" position. Observe (Cont.) light must be lit (GREEN).
8. Release independent brake valve and press "IND. APP." button. *Note brake cylinder pressure and piston travel on all units.* Note console indication (IBA).
9. Press "IND. REL." button and note that all brake cylinders release and "IBA" light goes out.
10. Position console feed valve switch to "IN" position.
11. Press "AUTO. REL." button and note that console indicates "FEED VALVE IN."
12. Check feed valve pressure. Adjust to 90 PSI.
13. Momentarily press "AUTO. APP." button to indicate a 5 PSI reduction. Note brake cylinder pressure.
14. Press "AUTO. APP." button and note a further brake pipe reduction.
15. Press "IND. REL." button and note that brake cylinder pressure releases. (IBA light goes out.)
16. Press "AUTO. REL." button and note brake pipe pressure is restored to 90 PSI.
17. Set manual independent brake valve.
18. Position Mode Selector to "MU" position.
19. Position transition lever in No. 1 position.
20. Position reverser lever in "FORWARD" direction.
21. Position generator field and engine run switch to "ON" position.
22. Position throttle to No. 1 position and note load on each unit and be sure all units are moving in same direction. Within five seconds of this movement "TH-1" will be displayed on console.
23. Observe train-line monitor on Booster. It should display "ABFV", "ER", "GF" and "FO" lights. ("FO" and "RE" indicate direction of movement.)
24. Try reverse direction in the same manner as described above.
25. Place transition lever in "B" position. Trainline monitor will display "ABFV", and "B" and "FO" or "RE". At the same time, "DB" will be displayed on console.

26. Place throttle in No. 1 position. "ABFV", "FO", "B" and "BG" will be displayed on monitor. At the same time, "DB-1" will be displayed on console.

27. Advance throttle from 1 through 8th notches and watch console to see that displayed indications correspond with regular controller.

28. Condition regular control stand for "OFF" position.

29. *Remove generator field fuses from lead and booster units.*

30. Condition regular control stand for "Forward" motoring with generator field switch on.

31. Operate regular controller 1 through 8 and watch console to see that displayed indications correspond with regular controller. Indications should also be observed on Booster unit trainline monitor.

32. Place throttle in sixth (6) throttle position.
    a. Turn off radio circuit breaker on interface panel in nose of lead unit. Note: "NO CONT" should be lit.
    b. Reduce lead unit throttle to "IDLE" position. Booster units should remain in over-ride state sixth (6) throttle position.
    c. Make a minimum "ABA" reduction. Observe that Booster units return to "IDLE", and "ABFV" light on monitor goes out.
    d. Turn *ON* radio circuit breaker on interface panel in nose of lead unit.

33. a. Close trainline angle cock between lead and booster units.
    b. Place Mode Selector Switch to "ISOLATE" position.
    c. Depress "EMERGENCY STOP" button on lead unit.
    d. Observe that lead and booster units both go into emergency.
    e. Observe that "ABE" light is lit in booster unit.
    f. Place Mode Selector Switch in "IDLE" position and refer to Rule 177D for procedure to recover (P.C.) application.
    g. Open angle cock between units at completion of test.

34. Check operation of the four (4) radios by utilizing micro-type radio changeover switches and observe that green "CONT" indicator is lit on Locotrol console.

35. Condition regular control stand to "OFF" position. Remove reverser lever.

36. Condition Locotrol console as follows:
    a. Turn Feed Valve Switch to "OUT" position.
    b. Turn Mode Selector to "ISOLATE."
    c. Turn Console Power Switch to "OFF."
    d. Turn all circuit breaker switches off on master interface relay cabinet and lock.

37. *Replace all generator field fuses that were previously removed.*

38. Lock all windows and cab doors on Booster units.

39. *Lead and Booster unit Locotrol circuit breaker switches must remain locked until units are placed on train in train yard. At this time, switches will be turned on and locks reapplied by authorized personnel.*

207.–General Rules – Cars:

(a) Piston Travel Limits – Cars:

1. Freight Cars
   a. With body mounted brake cylinders – 7 to 9 inches
   b. With truck mounted brake cylinders – As indicated on badge plate or stenciling on car.
2. Passenger Cars
   a. With truck mounted brake cylinders – 2 to 6 inches
   b. With body mounted brake cylinders – 7 to 9 inches

(b) Before adjusting piston travel or working on brake rigging, cutout cock in brake pipe branch must be closed and air reservoirs must be drained. When cutout cocks are provided in brake cylinder pipes, these cutout cocks only may be closed and air reservoirs need not be drained.

(c) Brake shoes will be removed when they reach the following thickness, measured at the thinnest point of the shoe.

Shoe Type	Thickness
Cast Iron	1/2 inch
Composition	3/8 inch
Budd Disc	1/4 inch

208.–Passenger cars having graduated release brakes must have graduated release feature set for Direct Release when handled in freight trains. Air supply to water raising system must be cut out.

YARD TEST

209.–When train air brake system is tested from a yard test plant and engineer's brake valve or a suitable test device must be used to provide increase and reduction of brake pipe air pressure and release at the same or slower rate as with the engineer's brake valve and yard test plant must be connected to the end which will be nearest to the hauling road engine. The train brake system must be charged and tested as prescribed by Rule 33 through 45.

210.–At points where inspectors are employed to make a general inspection of trains upon arrival at terminals, visual inspection must be made of retaining valves and retaining valve pipes, release valves and rods, condition of brake shoes, brake rigging, safety supports, hand brakes, hose and position of angle cocks, and make necessary repairs or mark for repair tracks any cars to which yard repairs cannot be promptly made.

TESTING AND REPAIRING BRAKES ON CARS WHILE ON SHOP OR REPAIR TRACKS

211.–When a freight car having brake equipment due for periodic attention is on shop or repair tracks where facilities are available for making air brake repairs, brake equipment must be given attention in accordance with the requirements of the currently effective AAR Code of Rules for cars in interchanges.

(a) When a freight car having brake equipment not due for periodic attention as indicated by standard stenciling is on shop or repair tracks, brake equipment must be tested by use of single car testing device as prescribed by currently effective AAR Code of Tests, providing such car has not been so tested within the previous 90 days indicated by stenciling. Piston travel must be adjusted to nominally 7 inches on cars having standard single capacity brake. Piston travel of brake cylinders on freight cars equipped with other than standard single capacity brake, must be adjusted as indicated on badge plate or stenciling on car located in a conspicuous place near brake cylinder. After piston travel has been adjusted and with brakes released, sufficient brake shoe clearance must be provided.

(b) When a car equipped for use in passenger train service not due for periodical air brake repairs, as indicated by stenciled or recorded cleaning dates, is on shop or repair tracks, brake equipment must be tested by use of single car testing device as prescribed by currently effective AAR Code of Tests. Piston travel of brake cylinders must be adjusted, if required, to the standard travel for that type of brake cylinder. After piston travel has been adjusted and with brakes released, sufficient brake shoe clearance must be provided.

(c) Before a car is released from shop or repair track, it must be known that brake pipe is securely clamped, angle cocks in proper position with suitable clearance, valves, reservoirs and cylinders tight on supports and supports securely attached to car.

212.–(a) If triple valve, control valves or brake cylinders on a freight car do not meet requirements during single car test as specified by the currently effective AAR Code of Tests, brake equipment must be given attention specified by currently effective AAR approved Code of Rules for cars in interchange.

(b) If, on passenger equipment cars, triple valves, control valves, brake cylinders, slack adjusters, high speed reducing valves, relay valves, quick service valves, vent valves, brake application valves or conductor's valves do not meet requirements during single car tests. If speed governor control, magnet valves, or wheel slide control does not operate properly when tested by a suitable test device, defective part or parts must be repaired or replaced and new cleaning date must be stenciled or recorded as required.

213.–When cars are on shop or repair tracks, hand brakes and connections must be inspected, tested and necessary repairs made to ensure they are in a suitable condition for safe and effective operation.

PERIODICAL REPAIRS

214.–(a) Brake equipment on cars must be cleaned, lubricated and tested as often as required to maintain it in a safe and suitable condition for service but not less frequently than is required by currently effective AAR Code of Rules for cars in interchange.

(b) All caboose gauges must be compared with the single car test device at time of in-date or COT&S tests. All caboose gauges must be compared to test gauge at least every six months and marked or tagged with date of test. Anytime caboose gauges are found exceeding 2 PSI differential with a test gauge, they must be replaced with an accurate gauge.

ENGINE AIR BRAKE EQUIPMENT OPERATION

AIR HOSE CONNECTIONS MULTIPLE UNIT CONSIST

215.–The hose connections must be made to provide proper functioning of the air brake equipment when units are operated in multiple.

Sand to Sand
App and Rel (Ind Eq) to App and Rel (Ind Eq)
Actuating to Actuating
MR Eq to MR Eq
Brake Pipe to Brake Pipe
Sand to Sand

BREAK-IN-TWO PROTECTION FEATURE

216.–(a) This feature has been added to regular emergency PC equipment on later model locomotives to provide a means of cutting off the flow of feed valve air to the brake pipe when an emergency brake application occurs (due to break-in-two, etc.). This prevents loss of air which would occur if the engineer failed to move the automatic brake valve handle to LAP position (EMERGENCY position on 26L equipment) following an emergency application.

(b) The same method of recovery is to be used as described in Rule 94.

ENGINE BRAKE EQUIPMENT
NO. 6 BRAKE EQUIPMENT

217.–Modifications have been made to the basic No. 6 type brake equipments as new developments and techniques lended themselves applicable to provide an upgrading of the equipment. The use of new style distributing valves, independent brake valves, multiple-uniting and fail safe features make this equipment far advanced in relation to the features available at the time it first was introduced:

(a) **Automatic Brake Valve**: The handle positions of the No. 6 Automatic Brake Valve are as follows:

1. RELEASE position–The purpose of this position is to provide a large and direct passage from the main reservoir to the brake pipe, thereby reducing the time required to release train brakes. However, this position is now blanked and provides charging through the feed valve, same as RUNNING position. A warning port is used to produce sufficient noise to attract attention that the handle is in this position.
2. RUNNING position–This is the proper position of the handle for charging and releasing the train brakes. In this position, a large direct passage connects the feed valve to brake pipe, thereby providing control of the charging pressure.
3. LAP position–This position is used when it is desired to hold the brakes applied after a service application. All ports in the brake valve are closed and no charging or further reduction of brake pipe can occur.
4. SERVICE position–In service position, the equalizing reservoir pressure is reduced, which in turn reduces the brake pipe pressure at a service rate, thereby causing the brakes to apply.
5. EMERGENCY position–This position is used when the most rapid and heavy application of the brakes is desired or required. Large and direct openings are made through the rotary valve to vent equalizing reservoir and brake pipe pressure to atmosphere at an emergency rate, thereby causing the brakes to rapidly apply and give maximum braking force in the shortest possible time.

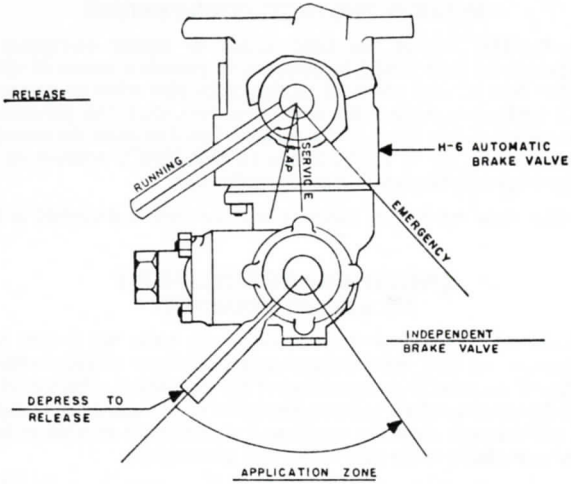

NO. 6 BL BRAKE EQUIPMENT

(b) **Independent Brake Valve**: The independent brake valves used with No. 6 brake equipment may vary, but the most common used is the SA-26 type. This is a self-lapping brake valve, by means of which the engine brake cylinder pressure is controlled independently of the train brakes according to the position of the handle.

The valve has two handle positions with an Application Zone as follows:

1. RELEASE–Normal position of the handle with engine brakes released. The handle may be depressed in this position when it is desired to release the engine brakes when an automatic brake application is in effect. Either a full or partial release is possible, depending on the amount of application cylinder air vented before the handle is allowed to return to normal position.
2. APPLICATION ZONE–The zone between the extreme positions. Movement of the handle toward the right through this zone will provide increased engine brake cylinder pressure.
3. FULL APPLICATION–This position provides maximum brake cylinder pressure as determined by the self-lapping portion adjustment.

(c) **Feed Valve**: Regulates the pressure supplied to the brake pipe through the automatic brake valve rotary valve. Main reservoir air is reduced to the desired brake pipe pressure and is automatically maintained when the brake valve handle is in RUNNING position.

A clockwise movement of the feed valve adjusting handle will increase the brake pipe pressure setting and a counter-clockwise movement will lower the pressure setting.

(d) **Distributing Valve**: The distributing valve controls the flow of air to apply or release the engine brakes, with either the automatic or independent brake valve.

The valve consists of two portions called the "Equalizing Portion" and the "Application Portion". The equalizing portion is used in automatic brake applications and the application portion is utilized in independent applications by means of the independent brake valve.

(e) **Vent Valve**: Most units are equipped with a brake pipe vent valve that acts to rapidly propogate emergency brake applications by locally venting brake pipe pressure.

(f) **Dead Engine Fixture**: Allows brake pipe air to charge the brake equipment for distributing valve operation when engine is handled Dead-In-Train.

24 RL BRAKE EQUIPMENT

218.–This brake equipment was designed for road freight and passenger service starting in the early diesel electric engines:

(a) **Automatic Brake Valve**: The automatic brake valve may be of the internal or external quadrant type

24RL BRAKE VALVES

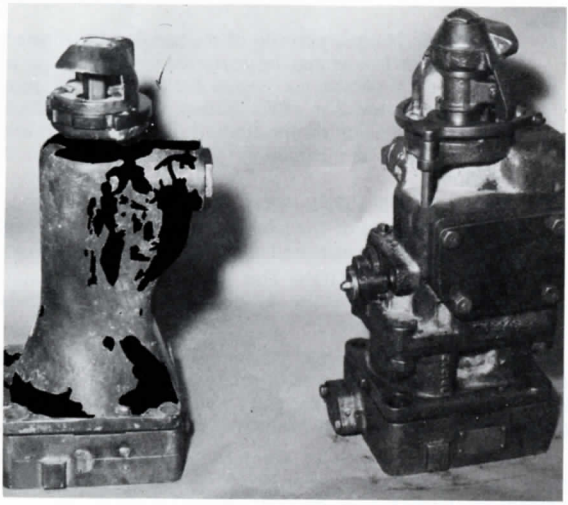

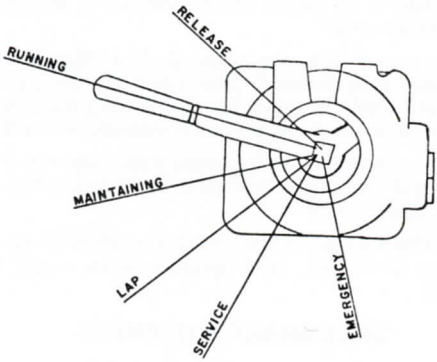

– MAINTAIN IN FIRST SERVICE

The brake equipment maintains in FIRST SERVICE position. After the service equalizing reservoir reduction is made, the brake valve handle is returned to FIRST SERVICE position while air is still exhausting from the service exhaust port with no pause at LAP position. The handle must not be moved from FIRST SERVICE position to RUNNING or LAP positions, then returned to FIRST SERVICE position.

Split service reductions can be made by moving the handle from FIRST SERVICE to SERVICE and return immediately to FIRST SERVICE position.

It is important that the brake pipe pressure maintaining feature be cut out during the train air brake tests. This feature is cut out by using LAP position after service reductions instead of moving the handle to FIRST SERVICE position. The feature can also be cut out by means of a handled valve located on a portion at the base of the automatic brake valve stand. The two available positions are marked OUT and IN.

(b) **S-40 Independent Brake Valve**: The independent brake valve used with 24-RL brake equipment is the S-40 type. This is a self-lapping brake valve and controls engine brake cylinder pressure independent of the train brakes.

The valve has two handle positions with an Application Zone as follows:

1. RELEASE–Normal position of the handle with engine brakes released. The handle may be depressed in this position when it is desired to release the engine brakes with an automatic brake application in effect.
2. APPLICATION ZONE–The zone between the extreme positions. Movement of the handle to the right into this zone will provide increased brake cylinder pressure in relation to the position of the handle within the zone, until maximum pressure is reached in the FULL APPLICATION position. Movement of the handle to the left will decrease the pressure accordingly.
3. FULL APPLICATION–This position provides maximum brake cylinder pressure as determined by the self-lapping portion adjustment. A "notch" can be felt in this position and this feature provides a locking arrangement to prevent the handle from being easily moved.

(c) **Feed Valve**: The purpose of this portion is the same as described under the section covering No. 6 brake equipment.

(d) **K-2-A Rotair Valve:** A selector valve used to control the independent brake valve operation. This valve has four positions as follows:

1. FRT–Operating as a lead unit on long freight trains.
2. PASS–Operating as a lead unit on passenger trains, freight trains of 50 cars or less, light engine movements, and units operating in push/pull Suburban Service when operating from Control Car.
3. FRT LAP–Operating as a trailing unit when lead unit in engine consist is set in FRT position.
4. PASS LAP–Operating as a trailing unit when lead unit in engine consist is set in PASS position.
5. The handle should be positioned in accordance with Rule 88.
6. PASS–position must be used during any light engine movements, thereby nullifying the controlled emergency feature and providing a fast build up of brake cylinder pressure.

Most units equipped with 24RL have had the K-2-A rotair valve handle removed and a double ported cut out cock installed under the independent brake valve.

1. OPEN position–Operating as a lead unit on freight or passenger trains, or being handled dead in train.
2. CLOSED position–Operating as a trailing unit in consist.

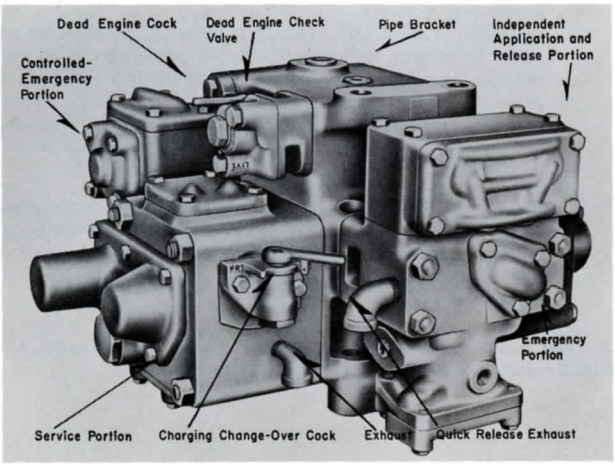

D-24RL CONTROL VALVE

(e) **Combined Auxiliary, Emergency and Displacement Reservoir**: A combined reservoir used to provide the following functions:

1. Auxiliary Reservoir–Provides the air supply for proper functioning of the control valve service portions.
2. Emergency Reservoir–Provides a local air supply for the control valve to provide the quick recharge, graduated release and high emergency pressure feature.
3. Displacement Reservoir–A volume used to provide a proper relation of control pipe pressure for a given brake pipe reduction resulting in compatibility of engine and train brakes.

(f) **Control Valve**: The D-24 type control valve, when actuated by the brake valve, charges, applies and releases the brakes of the engine and consists of the following portions:

1. Service Portion–Controls the application and release of the engine brakes in accordance with the automatic brake valve handle movement or actuation of engine safety devices.
2. Emergency Portion–Controls the emergency brake application to provide high emergency application pressure and also provide accelerated release after emergency application.
3. Independent Application and Release Portion–Provides independent engine brake application and release as controlled by the independent brake valve as well as quick local independent release.
4. Dead Engine Portion–Permits charging of the main reservoir when the engine is handled Dead-in-Train. A cock is located on this portion which is used for cutting in and cutting out the dead engine feature.

(g) **Relay Valve**: The relay valve relays the application and release operation of the control valve by reproducing in the brake cylinders the equivalent air pressure established in the control pipe. Some engines are equipped with differential type relay valves to provide compatible braking ratios under various conditions by means of speed governor control.

219.–26L BRAKE EQUIPMENT: The 26-L Brake Equipment is the most modern brake equipment available and utilizes new design characteristics, which include a simplified structure of internal parts. The use of diaphragm operated pistons and spool valves with rubber "O" rings eliminate the ring fitted pistons and slide valves found in older brake equipment.

26-C AUTOMATIC BRAKE VALVE

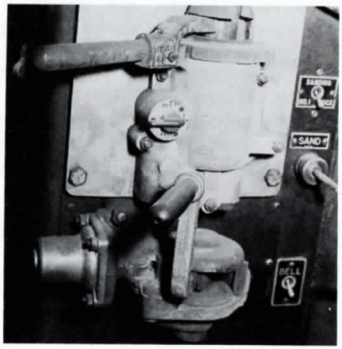

(a) **26-C Automatic Brake Valve**: The 26-C automatic brake valve is a self-lapping brake valve and consists of two main portions: the automatic portion designed for regulating the brake pipe pressure controlling both engine and train brakes, and the independent portion arranged to apply and release engine brakes independent of the train brakes and to control the release of an engine automatic brake application independent of the train brakes.

The automatic brake valve also provides a brake pipe pressure maintaining feature which maintains brake pipe pressure against overcharge and leakage, as related to equalizing reservoir pressure, unless the brake valve cut off valve is placed in OUT position.

The regulating valve takes the place of the feed valve that is common on other types of brake equipment. This valve regulates the supply and exhaust of air pressure to the equalizing reservoir, which in turn regulates brake pipe pressure.

(b) The automatic brake valve handle has six handle positions from left to right as follows:

1. RELEASE (RUNNING) Position–This position is for charging the equipment and releasing the engine and train brakes. It is located with the brake valve handle at the extreme left of the quadrant and is the normal running position.
2. MINIMUM REDUCTION Position–This position is located with the brake valve handle against the first raised portion on the quadrant to the right of RELEASE position. With the brake valve handle moved to this position, a 5 to 7 pound brake pipe reduction is obtained. On some engines movement of the handle to this position will nullify a penalty application caused by overspeed or safety control.

3. SERVICE Position–This position consists of a sector of brake valve handle movement to the right of MINIMUM REDUCTION position. Movement of the brake valve handle from left to right through this sector will cause the degree of brake application to be increased and automatically lapped-off until a 23 pound brake pipe reduction is obtained. Additional brake pipe reductions may be made and a full service brake application obtained by moving the brake valve handle further to the right on the second raised portion of the quadrant toward HANDLE-OFF position until the desired reduction of equalizing reservoir pressure has been made. A continuous service brake pipe reduction is obtained in HANDLE-OFF position.
4. SUPRESSION Position–This position is located with the brake valve handle against the second raised portion of the quadrant to the right of RELEASE position. Although this point on the quadrant is called SUPPRESSION position, on some of our engines, suppression of an overspeed brake application may be made in MINIMUM REDUCTION position, or at any point on the quadrant up to and including HANDLE-OFF position. The brake valve handle must be placed in this position for 30 seconds to recover control of engine after a safety control brake application has occurred.
5. HANDLE-OFF Position–This position is located by the first quadrant notch to the right of SUPPRESSION position. The handle may be removed in this position. This is the position in which the handle must be placed and removed on trailing units of a multiple-unit engine or on engines being towed Dead-In-Train.

   As stated under SERVICE POSITION, a continuous service brake pipe reduction is obtained in this position.
6. EMERGENCY Position–This position is located to the extreme right of the brake valve quadrant. It is used to make brake valve emergency brake applications. When an emergency brake application is initiated from other than the automatic brake valve, the handle must be moved to EMERGENCY position and left in this position for approximately 60 seconds to properly reset the A-1 Charging Cut Off Pilot Valve. The handle may then be moved to Release position and the brake system will recharge.

26-L BRAKE EQUIPMENT
AUTOMATIC BRAKE VALVE HANDLE POSITIONS

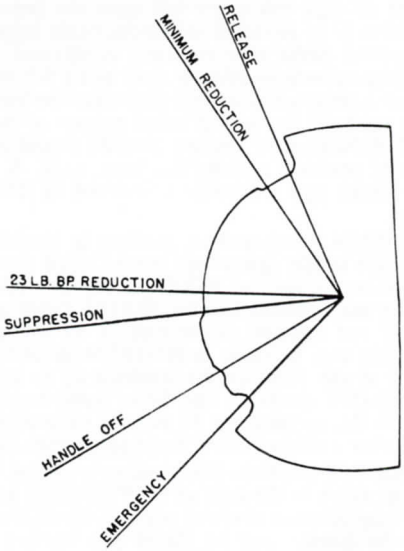

(c) The cut off valve (double heading cock) is provided for cutting in and cutting out the automatic brake valve. The handle is spring loaded and must be depressed before the valve can be turned. Three position type cut off valves are employed with positions OUT, FRT and PASS. FRT position provides direct release operation and graduated release is not available as equalizing reservoir pressure can only be increased when the automatic brake valve handle is placed in RELEASE position. PASS position provides a graduated release as equalizing reservoir pressure can be increased when the automatic brake valve handle is moved towards release position. OUT position is used when the brake valve is cut out on trailing units, double heading or hauled dead-in train. The use of OUT position also causes the brake pipe pressure maintaining to cease functioning and the cut off valve handle is therefore turned to this position when conducting brake pipe leakage tests.

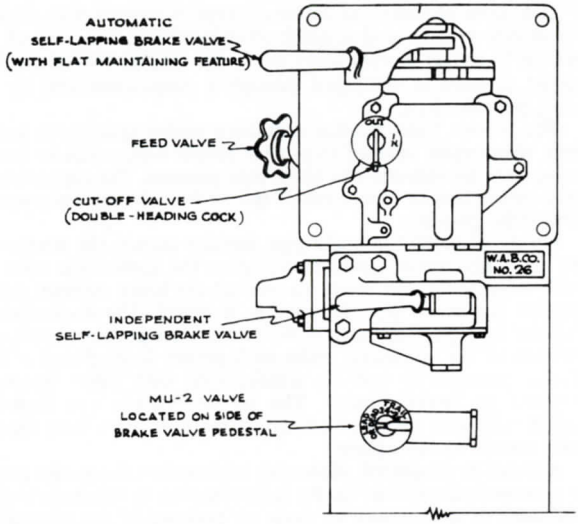

(d) **SA-26 Independent Brake Valve**: The SA-26 Independent Brake Valve, mounted on the front of the pipe bracket of the 26-C Brake Valve, provides independent control of the engine brake cylinder pressure irrespective of the train brakes. The brake valve handle has two positions; namely, RELEASE position at the extreme left end of the quadrant and FULL APPLICATION position at the extreme right end of the quadrant. From RELEASE to FULL APPLICATION position is an APPLICATION ZONE or sector and the further the handle is moved to the right into the sector, the greater will be the application until a full application is obtained at the extreme travel of the handle. The brake valve is a self-lapping pressure maintaining type valve and holds constant pressure.

The self-lapping feature also allows the engine brakes to be graduated on or off.

Depressing the independent brake valve handle whenever the handle is in RELEASE position will cause the release of any automatic brake application in effect. Depressing the independent brake valve handle with it somewhere in the APPLICATION ZONE will release the automatic application only to the value corresponding to the position of the handle in the APPLICATION ZONE.

The independent brake valve is cut in or out by positioning the MU-2-A Valve.

(e) **MU-2-A Valve**: A cam-operated spool valve that is employed to enable a 26-L equipped engine to operate in multiple with other 26-L, or 24-RL equipped engines. It is a spring loaded valve and the handle must be depressed before the valve can be positioned.

(f) **26-F Control Valve**: An automatic type of control valve consisting of a service portion and a quick release portion. The control valve responds to service or emergency rates of brake pipe reductions. Brake cylinder pressure is developed through a control reservoir by these brake pipe reductions.

The Service Valve Portion contains a service spool valve and two rubber diaphragms selected to provide proper brake cylinder pressure development by reduction in brake pipe pressure. The application and release valve controls movement of the air from the auxiliary reservoir to the brake cylinder.

When a reduction in brake pipe pressure occurs, the service spool valve assembly moves upward and opens the application valve. The service valve spool also serves to exhaust the brake cylinder pressure whenever the brake pipe pressure is increased. The diaphragm area ratios and spring arrangement in the service valve portion permit stable operation of the automatic brake with proper development of brake cylinder pressure to operate satisfactorily with other systems of automatic air brake control. The service portion also includes a charging valve that functions to cut off the flow of air from the quick service volume to atmosphere.

A direct or graduated release cap is located on the service portion. The position is determined by the type of service in which the engine is to be used. It is necessary to drain air pressure in the control valve before positioning this cap. The letters DIR over the letters REL indicate the valve is set for direct release and the letters GRA over the letters REL indicate the valve is set for graduated release.

The service portion also contains two brake cylinder pressure limiting valves. One limits the maximum brake cylinder pressure obtained during service brake applications and the other limits the maximum brake cylinder pressure obtained during emergency brake applications.

(g) **Independent Quick Release Valve**: The quick release valve portion is designed to permit independent release with an automatic brake application in effect. Depressing the independent brake valve handle causes the operation of the small diaphragm and spool valve assembly in the quick release valve portion. Movement of this diaphragm and spool valve vent to atmosphere the air pressure developed in the service application pipe to the relay valve. This prevents re-application of the brake upon release of the independent brake valve handle until another reduction is made.

(h) **P-2-A Brake Application Valve**: Provides a service penalty brake application when activated by Safety Control (foot pedal or overspeed). The P-2-A application valve makes the necessary port connections to charge the equalizing reservoir. When the application valve is moved to applied position, the ports are aligned to allow equalizing reservoir air to be reduced resulting in a penalty brake application.

During such an application, main reservoir air is connected to the PC switch.

Incorporated in the P-2-A is a suppression valve. The automatic brake valve handle must be placed in SUPPRESSION position to reset the P-2-A valve after a penalty brake application. During normal service braking or when the independent brake is applied and brake cylinder pressure has reached approximately 25 psi, the P-2-A suppression valve will be actuated, thus nullifying a penalty brake application.

(i) **J-1 and J-1.6-16 Relay Valves**: Diaphragm-operated, self-lapping type valves used to develop brake cylinder pressure during brake applications and exhaust this pressure during release of engine brakes from either an automatic or an independent brake application. The maintaining feature of this valve will operate to maintain brake cylinder pressure should an air leak be present.

The type of brake shoes used on an engine determines which type "J" relay valve is used.

All SA-26 independent brake valves are set at 35 psi at maintenance shops (except those used on Chicago Push Pull Suburban Control Cars). When 35 psi is delivered to the J-1 relay valve on an engine equipped with cast iron brake shoes, the valve will reproduce 100% of this pressure (35 psi) to the brake cylinders. The J-1.6-16 relay valve used on engines equipped with composition brake shoes will deliver to the brake cylinders 60% more pressure than is supplied from an independent brake application only. For example, when 35 psi is delivered to the J-1.6-16 relay valve from the independent brake valve, the J-1.6-16 will reproduce 64 psi in the brake cylinders. The reproduction of an automatic brake application remains 100%.

(j) **A-1 Charging Pilot Cut Off Valve**: Operates during a break-in-two to provide automatic sanding, power knockout (PC), and brake pipe cut off. These features were provided on older engines by means of H-type Relayair Valves. When this valve is actuated by a break-in-two, it must be reset and therefore cease to provide the above listed features.

Reset is accomplished by placing the automatic brake valve handle in EMERGENCY position for approximately 60 seconds and then to RELEASE position.

(k) **Vent Valve**: Ensure rapid propogation of an emergency brake application either to or from the train by locally venting brake pipe pressure when actuated.

(l) **Dead Engine Fixture**: Allows brake pipe air to charge the brake equipment for control valve operation when engine is hauled Dead-In-Train.

AIR COMPRESSOR

220.–The engine air compressor furnishes the compressed air requirements of the engine and car air brake equipment and for this reason it is considered the nucleus of the air brake system.

The air compressor acts to compress the air in two stages, namely, a low pressure stage and a high pressure stage. The low pressure cylinders compress the air initially to about 40 psi.

The air is then cooled by means of finned tubing (intercooler) and passed to the high pressure cylinders for the final compression to about 140 psi. The air is again routed thru additional piping (aftercooler) to cool it before being sent to the main reservoir where it is stored until required.

The need for the air compressor to be constantly working is not required and for this reason, unloader valves are used which operate to prevent air from being compressed except when required. This is accomplished by means of a compressor control switch (CCS) which is set to de-energize (or energize on some engines) a compressor control magnet valve at certain pressures. Thus, when main reservoir pressure falls below the low setting (130 psi) of the compressor control switch, the compressor control magnet valve is de-energized and acts to operate the compressor unloader valve causing the air compressor to pump air. When the main reservoir pressure reaches the high setting (140 psi) the compressor control switch causes the magnet valve to energize, thereby unloading the air compressor until air is again required.

SAFETY VALVES

221.–(a) Safety valves are used to restrict the accumulation of operation pressures within predetermined limits.

A safety valve is required in the main reservoir system of each engine and is usually installed in a branchpipe, as close as possible to the outlet of the No. 1 main reservoir.

(b) If the main reservoir safety valve, or valves, open intermittently, the cause is usually one of the following items:

Main Control switch in cab not closed.

Cut Out cocks closed or an obstruction in main reservoir equalizing line.

Improper adjustment of compressor control switches.

Obstruction in pipe to compressor or control switch.

Compressor control switch sticking in "load" position.

(c) In the event the main reservoir safety valve on any unit of a multiple unit engine loses its adjustment to the extent that it reduces main reservoir air pressure to where brakes cannot be released, arrange to handle as follows:

Unload the compressor by means of the manual unloading valve and block out the compressor relay on that unit. Readjust safety valve and leave cut out cocks in the main reservoir equalizing line between units open so that air may be supplied from other units for operation of air brakes, boilers and auxiliary devices.

ENGINE SANDING EQUIPMENT

222.–The sanding system on an engine provides a means of applying sand to the rail to increase adhesion between the wheel and rail, thereby preventing the wheels from slipping. It can be a pneumatic system, a combination electro-pneumatic system, or an electric system and can be operated either manually or automatically.

The combination electro-pneumatic system is the most common and consists of the sander (lead axle or full sanding), relay valves, control valves, solenoid operated valves, and sand traps.

Movement of the sander switch or valve to either forward or reverse position admits actuating air to operate a duplex (forward or reverse) solenoid valve. Air passes through the solenoid valve to the sander relay valve which acts to allow main reservoir air to flow through the sanding actuating trainline and to the control valves. The solenoid also acts to energize the electrical sanding system components and the trainline wire. The control valves are then positioned to let main reservoir air actuate the sand traps which control the amount of sand delivered to the rail.

If an emergency or safety control application occurs, the entire sanding system is automatically actuated to provide both forward and reverse sanding at the same time.

To provide optimum operation, the sand traps should be set to deliver about 24 ounces of sand per minute at the rail.

CAR AIR BRAKE EQUIPMENT OPERATION

FREIGHT CAR BRAKE EQUIPMENT
AB BRAKE EQUIPMENT

223.–The AB freight car brake equipment is the standard for all freight cars and includes equipment having AB, ABD or ABC-1 service portions.

(a) The following parts make up the AB freight brake equipment:

1. ABC Control Valve–That operates to control the admission of air and exhaust from the brake cylinder and to charge the reservoir.
2. Brake Cylinder–With piston and rod so connected through the brake levers and rods to the brake shoes that when the piston is forced outward by air pressure, this force is transmitted through the rods and levers to the brake shoes and applies them to the wheels.

3. Two Compartment Reservoir–Which contains the *auxiliary* and *emergency* reservoir volumes. The auxiliary volume supplies air for service brake applications and both volumes supply air for emergency applications. The emergency volume also assists in the recharge of the auxiliary volume after a service application.
4. Combined Dirt Collector and Cut Out Cock–Mounted on the AB valve pipe bracket. The purpose of the dirt collector is to prevent entrance of foreign particles into the AB valve. The cut out cock provides a means of closing the pipe connection between the AB valve and the brake pipe.

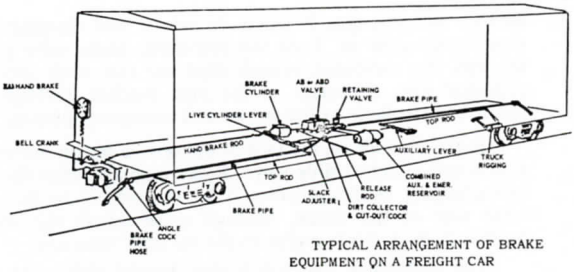

TYPICAL ARRANGEMENT OF BRAKE EQUIPMENT ON A FREIGHT CAR

5. Pressure Retaining Valve, or Release Control Retainer–Which is connected by piping to the AB valve exhaust. Its purpose, when the handle is placed in retaining position, is to retard the rate of brake cylinder exhaust while recharging the equipment and when brake cylinder pressure has been reduced to a certain predetermined amount, the pressure in the brake cylinder is retained.
6. Angle Cock–At each end of the brake pipe and also hose connections with couplings which provide a means of flexible connection between the brake pipe on adjoining cars.

(b) **The AB Control Valve Consists of three portions:**

1. Pipe bracket–To which the service and emergency portions are bolted. The bracket is bolted to the car underframing and all pipe connections are made permanently to the bracket so that no pipe joints need be disturbed when removing or replacing the operating portions. This bracket contains a removable strainer and a quick action chamber.

2. Service Portion—Which controls (either directly or through the medium of the emergency portion) the desired charging of the reservoirs and the service application and release of the brakes. Attached to the service portion is the *duplex release valve,* which controls the opening of the auxiliary reservoir release valve and the emergency reservoir release valve, permitting manual reduction or depletion of auxiliary reservoir pressure alone or both reservoirs together.
3. Emergency Portion—Which controls the quick action feature controlled brake cylinder pressure buildup (three stage) and the accelerated emergency release function.

(c) **AB Operation:**

1. Release and Charging Position—In release and charging position, brake pipe air from the automatic brake valve passes through the combined branch pipe cut out cock and dirt collector into a passage in the pipe bracket, through the strainer to the faces of the service and emergency pistons.

   Brake pipe air on the face of the service piston moves the piston and attached slide valve. Brake pipe air passes through two charging chokes uncovered by the piston, to the slide valve side of the piston, through a passage in the service portion body and into a pipe to the auxiliary reservoir.

   The emergency reservoir is also charged with brake pipe air flowing by way of the service slide valve chamber, through a restricted port in the slide valve to a passage in the control valve body, through a pipe and into the emergency reservoir.

   Brake pipe air on the face of the emergency piston also flows through a charging choke to the slide valve side of the piston and into the quick action chamber. (A small volume in the pipe bracket.)

   An AB system being charged through the two small chokes just described is being charged at the maximum possible rate and the time required to completely charge a car is approximately 8 minutes. The brake cylinder is connected to the atmosphere through a pipe connection from brake cylinder to brake cylinder passage in the pipe bracket and through a pipe to the retainer valve (exhaust). This completes the charging operation and when the pressure in the auxiliary and emergency reservoirs become equal to that pressure applied by brake pipe, the AB system is charged.

AB VALVE WITH QRB BRAKE CYLINDER RELEASE VALVE

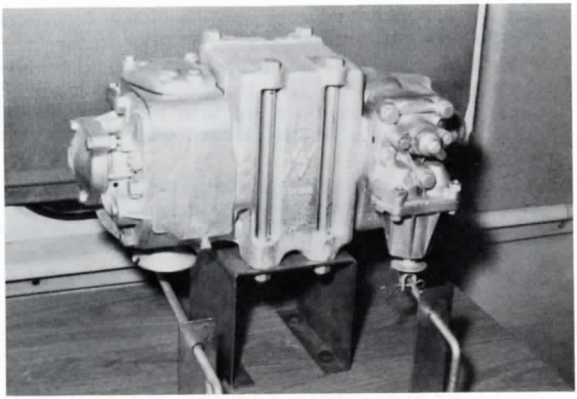

AB BRAKE EQUIPMENT FOR RAILROAD FREIGHT CARS

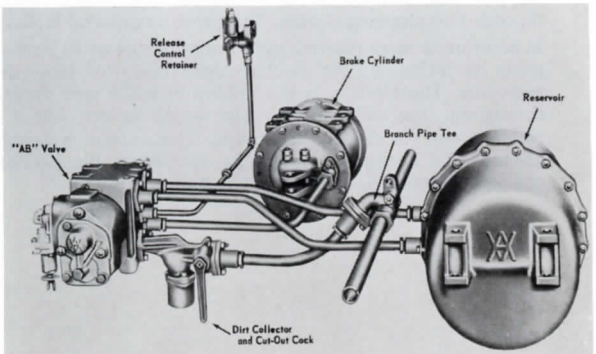

"AB" BRAKE EQUIPMENT FOR RAILROAD FREIGHT CARS

2. Preliminary Quick Service–Quick service occurs during the first action of a service application by means of porting brake pipe air to a small reservoir quick service volume located in the service portion. This results in a local drop in brake pipe pressure and produces a brake pipe reduction of approximately 6 psi and a brake cylinder pressure of about 10 psi.

   A brake pipe reduction of approximately 3 psi or less will cause quick service in a fully charged air brake system. The engineer has no control over the total brake pipe reduction caused by the quick service function other than the initial brake pipe reduction.

   As quick service activity is completed, the brake pipe air flow to the quick service volume is terminated and directed to the brake cylinder. When the brake cylinder pressure reaches approximately 10 psi, the brake pipe air flow ceases due to action of the quick service limiting valve. The valve then assumes a lap position, in which the flow of all air ceases.

3. Service–Further brake pipe reductions will cause additional auxiliary reservoir air to be ported to the brake cylinder, but the connection of the brake pipe air to the quick service volume and brake cylinder is blanked. This is referred to as service position. After the brake pipe reduction is completed, the valve again assumes a lap position.

4. Release–An increase of brake pipe pressure over that in the auxiliary reservoir will release an AB control valve after service or emergency applications. The valves are so designed to give a uniform release throughout the train. Front end retarded recharge accomplishes this by recharging the auxiliary reservoirs near the head end of a train through *one* charging choke while auxiliary reservoir pressures are built-up on the rear portion at an increased rate, being charged through *two* charging chokes. This provides uniform recharge. In addition, a more positive and prompt release of all brakes is made by recharging the auxiliary reservoirs from emergency reservoirs. Therefore, a faster buildup of brake pipe pressure throughout the train results than would be possible if all recharge was from the brake pipe. This feature is possible because the emergency reservoirs remain at the pressures charged previous to the brake application.

5. Emergency—When an emergency rate of brake pipe reduction takes place from any cause, the AB control valves throughout a train will provide maximum brake cylinder pressure in three different stages. For example, an emergency brake application initiated at the automatic brake valve on the engine will result in rapid venting of brake pipe pressure, causing a pressure differential at the AB valve emergency portion piston. As a result of this pressure differential, the emergency piston will move to allow quick action chamber air to unseat the vent valve, thereby opening a large and direct passage from the brake pipe to atmosphere.

This rapid venting of brake pipe pressure passes serially and rapidly through the train due to the AB valves on each car operating as described above.

Quick action chamber air is required to dissipate through a small choke and for this reason, the vent valve piston is held open a definite period of time. This serves to prevent a release of an emergency brake application before the train is brought to a complete stop.

In the first stage, the reduction in brake pipe pressure causes the service piston and slide valve to move to the extreme left position and uncover ports which allow auxiliary reservoir to join with emergency reservoir air in its flow to the brake cylinders.

This combined air pressure will flow at an unrestricted rate through an inshot valve to the brake cylinders until approximately 15 pounds brake cylinder pressure is developed.

In the second stage, brake cylinder pressure buildup continues, but at a slower rate because the inshot valve is closed and the air pressure to the brake cylinder flows through a small choke, delaying buildup.

This delayed buildup is continued until increased brake cylinder pressure unseats a timing valve, which begins the third and final stage in the development of emergency brake cylinder pressure.

The timing valve combines emergency and auxiliary reservoir pressure to the brake cylinder producing a faster rate of final brake cylinder pressure buildup until equalization is reached.

The controlled brake cylinder pressure development is modified when a partial service brake application precedes an emergency application and is completely annulled when a service brake application has developed 30 pounds (or more) brake cylinder pressure prior to an emergency application being made.

Since an emergency application results in air from both the emergency reservoir and the auxiliary reservoir flowing to brake cylinder until pressures equalize, a higher brake cylinder pressure is obtained than is possible from a full service application.

6. Accelerated Emergency Release–The release after an emergency application is accomplished by again supplying brake pipe air from the automatic brake valve into the train brake pipe. When the air pressure on the face of the AB valve emergency piston has increased sufficiently, the piston moves and permits brake cylinder and auxiliary reservoir air to flow into the brake pipe. This flow will continue until the pressures are within 10 pounds of equalization, thus providing a quick initial buildup of brake pipe pressure.

   Auxiliary reservoir pressure is being partially reduced while the brake pipe pressure is being initially built-up throughout the train and the development of that brake pipe pressure needed to release the brakes is accomplished much sooner than it would be by raising brake pipe pressure through the brake valve alone. Therefore, a more prompt and positive release of the brakes is accomplished.

AB BRAKE EQUIPMENT WITH ABD CONTROL VALVE

224.–The AB freight car brake equipment with ABD control valve is comparable in its operation and is interchangeable with the AB freight car brake equipment with AB valve. Improvements in the ABD valve include provision for increased release sensitivity. The improvements incorporated in the ABD control valve are in the service and the emergency portions. The pipe bracket is the standard AB pipe bracket portion.

The changes in the service portion of the ABD control valve include use of a piston containing a rubber diaphragm structure. Further, the piston and slide valve are mounted vertically for more efficient and uniform operation. Likewise, the emergency portion utilizes a piston containing a rubber diaphragm structure and graduating valve, which are also mounted vertically for more efficient and uniform operation. Included in the arrangement is a feature to accelerate the release of service brake applications by use of air from the emergency reservoir to speed recharge of brake pipe during release.

This accelerated release feature is different than the standard AB since on the ABD, emergency reservoir air flows into brake pipe. This improved feature allows for a more rapid release of service applications than is found with the standard AB valve.

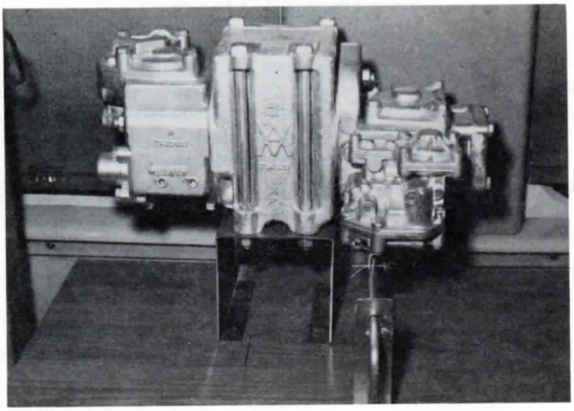

An undesired release of brakes on a train may occur due to improper operation of an angle cock. Under certain conditions a "wave effect" is set up by the rushing of air toward the engine brake valve exhaust which is suddenly stopped due to closing of an angle cock, with the result that the air wave is reflected and directed in the reverse direction, causing a sufficient differential in brake pipe pressure to produce a release of brakes. For this reason, strict compliance with Rule 47 is required.

Emergency quick action can be obtained at any time except when brake pipe has been reduced to 30 psi or below, at which point it becomes questionable whether or not emergency brake cylinder pressure will be obtained on the entire train. Emergency brake cylinder pressure is approximately 20% higher than that obtainable from a full service brake application.

The development of emergency brake cylinder pressure is in two stages (at a predetermined controlled rate) rather than three stages as found in the standard AB.

The parts that make up the AB freight car brake equipment with ABD valve are essentially the same as those listed for the standard AB valve except the *release valve* portion. This performs the same function as the duplex release valve in the AB valve, but may also be used to release brake cylinder pressure manually after a brake application as well as permitting manual reduction or depletion of auxiliary reservoir pressure alone or both auxiliary and emergency reservoirs together.

RETAINING VALVES

225.–(1) The pressure retaining valve controls the exhaust of brake cylinder pressure and may be used to allow either (a) brake cylinder pressure to exhaust freely to atmosphere, or (b) to retain a portion of the brake cylinder pressure to aid in retarding the train on long descending grades while the air brake system is being recharged.

All freight cars and the majority of passenger cars are equipped with pressure retaining valves. The valve is located at the "B" end of the car or at the side of the car near the control valve.

(2) There are two types of pressure retaining valves used on freight cars and the handle positions are as follows:

1. Four Position Release Control Retainer

   a. (EX) – Direct Exhaust Position (handle turned downward)

      Allows unrestricted passage of brake cylinder pressure to exhaust to atmosphere.

   b. (HP) – High Pressure Position (handle 45° below horizontal)

      Restricts exhaust of brake cylinder pressure at a controlled rate and retains 20 psi brake cylinder pressure.

   c. (LP) – Low Pressure Position (handle horizontal)

      Restricts exhaust of brake cylinder pressure at a controlled rate and retains 10 psi brake cylinder pressure.

   d. (SD) – Slow Direct Position (handle 45° above horizontal)

      Restricts exhaust of brake cylinder pressure at a controlled rate to provide a blowdown time of approximately 86 seconds and continues to exhaust until all pressure is vented to atmosphere.

RELEASE CONTROL RETAINERS

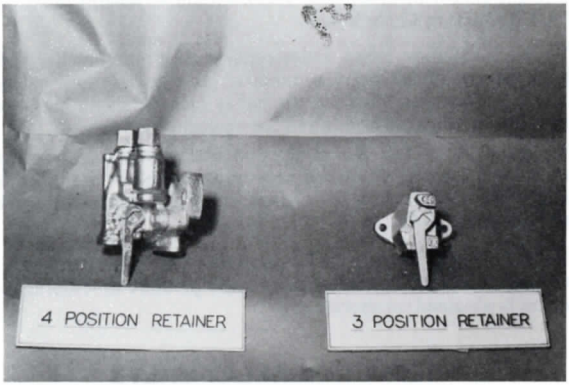

2. 1967–Three Position Retainer:
   a. (EX) – Direct Exhaust Position (handle turned downward)

      Allows unrestricted passage of brake cylinder pressure to exhaust to atmosphere.

   b. (HP) – High Pressure Retain Position (handle 30° below horizontal)

      Restricts exhaust of brake cylinder pressure at a controlled rate and retains 20 psi brake cylinder pressure.

   c. (SD) – Slow Direct Exhaust Position (handle 45° above horizontal)

      Restricts exhaust of brake cylinder pressure at a controlled rate to provide a blowdown time of approximately 86 seconds and continues to exhaust until all pressure is vented to atmosphere.

A-1 REDUCTION RELAY VALVE

226.–Freight cars with brake pipe of certain longer lengths require the use of A-1 Reduction Relay Valve.

(a) The A-1 Reduction Relay Valve consists of a pipe bracket with a B-1 Quick Service Valve portion mounted on one face and a No. 8 Vent Valve portion mounted on the other face. A single brake pipe connection to the bracket is required for operation.

The function of the A-1 Reduction Relay valve is to provide additional local venting of brake pipe pressure both in service and emergency brake applications on longer cars to compensate for the increased brake pipe volume.

(b) The B-1 Quick Service Valve produces the equivalent rate of service brake transmission and brake cylinder pressure development on long cars as is obtained on shorter cars.

A-1 REDUCTION RELAY VALVE

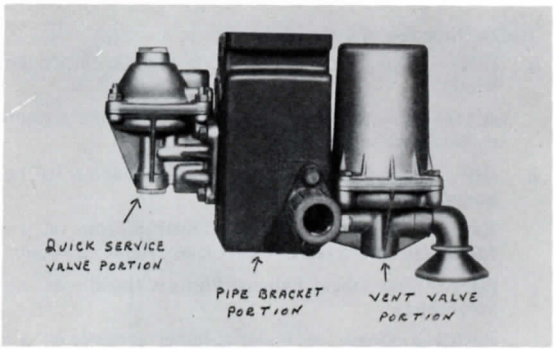

(c) The No. 8 Vent Valve operates during an emergency brake application to vent the additional brake pipe volume and transmit the emergency brake application throughout the train.

If the No. 8 Vent Valve should fail to reset after an emergency brake application resulting in a continuous blow at the exhaust port, the valve may be plugged. This is accomplished by removing the vent protector and inserting the plug, which is an integral part of the vent protector, into the exhaust port.

BRAKE CYLINDER RELEASE VALVE

227.–(a) The brake cylinder release valve is used with AB freight brake equipment and is manually operated to provide release of brake cylinder pressure without draining the reservoirs, thereby retaining the stored air.

Cars equipped with a brake cylinder release valve may be identified by a small white diamond-shaped stencil located outside of car near the release rod or the release rod will have a small closed loop at the end of the rod.

Some cars are equipped with one release rod which operates both the brake cylinder release valve and the duplex release valve. Those cars equipped with two rods are identified by stencil to indicate which rod controls the brake cylinder release valve.

(b) When bleeding cars of incoming trains for switching, operate the brake cylinder release valve on cars so equipped, by giving one pull on the brake cylinder release valve rod. This will release the air in the brake cylinder, retaining the air stored in the car reservoirs. The air remaining in the reservoirs reduces time required to charge an outgoing train for air test. The brake cylinder release valve automatically resets itself when brake pipe pressure is again restored and the control valve portions move to release position.

(c) To release stuck brakes, or drain car reservoirs, use the AB valve duplex release valve, leaving the brake cylinder release valve in normal position.

(d) The ABD service portion has the brake cylinder release valve integral with the duplex release valve. The operation of this valve is the same as the separate brake cylinder release valve, except that only one rod is used.

BRAKE CYLINDER RELEASE VALVE

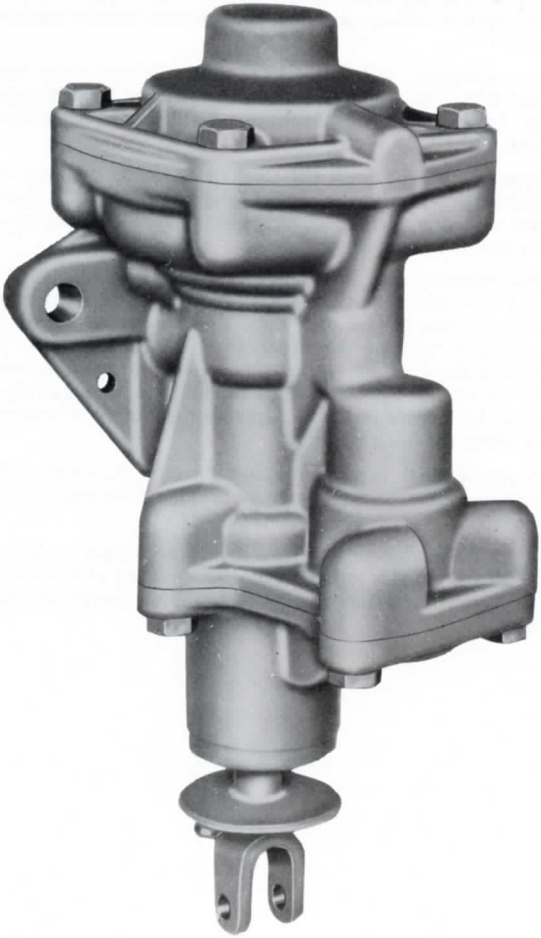

AUTOMATIC DOUBLE ACTING SLACK ADJUSTERS

228.–(a) When correctly installed, the automatic double-acting slack adjuster, by means of an actuator or control lever, will maintain proper predetermined piston travel without any manual adjustment. As brake shoes and wheels wear, the adjuster will operate automatically to maintain the shoe clearance required for proper piston travel. The fact that the slack adjuster is double-acting will result not only in taking up excess slack created in the brake system, but it will also let-out slack when necessary.

(b) When replacing brake shoes, DO NOT MOVE ANY BRAKE PINS. There is usually enough slack in the brake rigging to replace several shoes. If additional slack is needed to replace more shoes, apply and release brakes either by air or hand brake. After shoes are in place, the slack adjuster will automatically restore correct piston travel on application of the brakes.

(c) The use of multiple-wear wheels results in a large amount of slack developing in the brake rigging when both the wheels and brake shoes are worn to near the condemning limit, or when turned wheels are installed at time of wheel changeout. Therefore, all cars utilizing multiple-wear wheels must be checked when in shop or on repair track to determine that the horizontal lever of each truck has sufficient clearance so as not to foul the truck at anytime the brakes are applied. If a fouling condition exists, the bottom rod must be adjusted to restore truck lever angularity.

(d) Detailed information in regard to the various types and styles of slack adjusters may be found in the manufacturers' manuals available at maintenance facilities.

PASSENGER CAR BRAKE EQUIPMENT

D-22 BRAKE EQUIPMENT

229.–(a) The D-22-P passenger car brake equipment was designed primarily for high speed passenger service.

The basic operation principle is quite similar to that of the "AB" control valve.

(b) The various parts which make up the D-22-P equipment are:

1. The D-22 AR Control Valve–Controls charging, application, and releases the brakes.

   It consists of three (3) portions; the pipe bracket, service, and emergency portions. The valve portions have pistons, slide valves, and graduating valves which operate with other parts to provide the various features of operation.

2. Relay valve–Used in conjunction with the control valve to reproduce the proper brake cylinder pressure as indicated by the displacement reservoir.

3. Combined Auxiliary, Emergency and Displacement Reservoir–The auxiliary reservoir also is used to operate parts of the control valve and supplies air used in the relay valve and displacement reservoir during service and emergency brake applications. Emergency reservoir air is used to provide graduated release, quick recharge, and high brake cylinder perssures during emergency brake applications. The displacement reservoir provides the required volume so the relay valve can develop the proper brake cylinder pressure in relation to the brake pipe reduction made.

4. Supply Reservoirs–Provide the air for the brake cylinders.

5. Emergency Brake Valves–One at each end of the car, permits the trainmen to apply the brakes in case of emergency.

D-22-AR CONTROL VALVE, SHOWING PIPE CONNECTIONS

6. Combined Dirt Collector and Cut Out Cock–Mounted on the control valve bracket. The purpose is to prevent entrance of foreign particles into the control valve. The cut out cock provides a means of closing the pipe connection between the control valve and the brake pipe.

7. Pressure Retaining Valve–Which is connected by piping to the control valve exhaust. Its purpose, when the handle is placed in retaining position, is to retard the rate of brake cylinder exhaust while recharging the brake system.

8. Brake Cylinders–With pistons, rods, and levers so connected to apply the brake shoes to the wheels.
9. Automatic Slack Adjuster–Used with each brake cylinder, maintains a predetermined brake cylinder piston travel.
10. Duplex Release Valve–Which controls the opening of the auxiliary reservoir valve and emergency reservoir valve, permitting manual reduction of auxiliary reservoir pressure alone or both reservoirs together.
11. Graduated Release Cap–On the service portion conditions the control valve for Graduated or Direct release. The letters REL are cast on the body below the graduated release cap. The letters DIR and GRA are cast on the cap. When the letters DIR are over the letters REL the valve is conditioned for Direct Release; when the letters GRA are over the letters REL the valve is conditioned for Graduated Release. The cap is set by removing two nuts and turning the cap so that either DIR or GRA line up with REL on the body.
12. A-2 Car Discharge Valve–Which allows the reduction of signal line pressure to sound the communicating signal on the engine.

26-C BRAKE EQUIPMENT

230.–(a) The 26-C Passenger Car Brake Equipment is designed for cars operating in high speed passenger service and is the most modern equipment available for this purpose. Like the ABD valve, the 26-C equipment utilizes rubber diaphragms and "O" rings in place of pistons and rings.

(b) The following parts make up the 26-C Brake Equipment:

1. 26-C Control Valve–Which controls the flow of air to or from the brake cylinders on a car in response to increase or decrease in brake pipe pressure.
2. Emergency Vent Valve–Which provides a large local opening for exhaust of brake pipe air during an emergency application.
3. Reservoir Release Valve–Which provides a means of manually venting control reservoir air to atmosphere, thus releasing a brake application.
4. Combined Selector Volume and Control Reservoir, and Auxiliary Reservoir–The Selector Volume acts as a stabilizing volume during quick service and graduated release operations. The Control Reservoir provides a reference force to control the development of brake cylinder pressure.
5. Brake Cylinders–With pistons, rods, and levers so connected to apply the brake shoes to the wheels.
6. A-2 Car Discharge Valve–Which allows the reduction of signal line pressure to sound the communicating signal on the engine.

7. Emergency Brake Valves–One located at each end of the car to permit trainmen to apply the brakes in case of emergency.
8. Automatic Slack Adjuster–Used with each brake cylinder, maintains a predetermined brake cylinder piston travel.
9. Pressure Retaining Valve–Which is connected by piping to the control valve exhaust. Its purpose, when the handle is placed in retaining position, is to retard the rate of brake cylinder exhaust while recharging the brake system.
10. Combined Dirt Collector and Cut Out Cock–Mounted on the control valve bracket. The purpose is to prevent entrance of foreign particles into the control valve. The cut out cock provides a means of closing the pipe connection between the control valve and the brake pipe.

"26-C" CONTROL VALVE

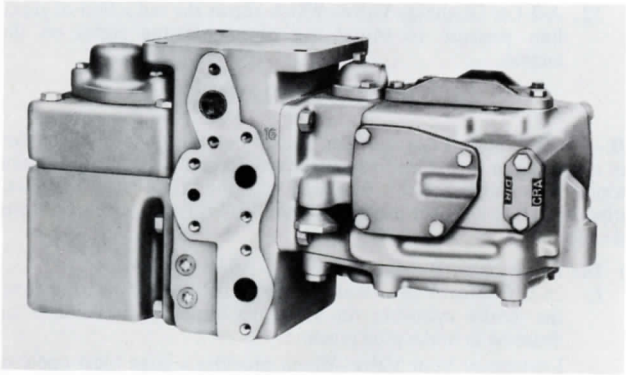

(c) The general operation of the 26-C brake equipment is as follows:

1. Charging–Air flows through the automatic brake valve to the brake pipe and the 26-C control valve to charge the combined selector volume and control reservoir, and the auxiliary reservoir.
2. Service–A reduction in brake pipe pressure causes the service piston of the 26-C control valve to move to service position. Auxiliary reservoir air is connected to the brake cylinder to apply the brake.

3. Service Lap–Upon termination of the brake pipe reduction, auxiliary air continues to flow to the brake cylinders until pressure acting on the 26-C control valve service piston moves the service piston to lap position.

   The control valve service piston remains in lap as long as the brake pipe and brake cylinder pressures do not change. In case of a further brake pipe reduction or loss of brake cylinder pressure due to leakage, the control reservoir air pressure moves the service piston to service position permitting an additional flow of auxiliary reservoir air to the brake cylinders.

4. Release–When the brake pipe is recharged and the increase of pressure moves the 26-C control valve service piston to release position, the auxiliary reservoir is recharged and the brake cylinder air exhausts to release the brake. The amount of brake release, with the graduated release cap set for GRA release, is proportional to the amount of brake pipe recharge as controlled by the automatic brake valve.

   A partial recharge of the brake pipe provides for partial release of the brake and a full recharge provides for a total brake release.

5. Emergency–When an emergency rate of brake pipe reduction occurs, the emergency valve of the 26-C control valve is operated to provide a local brake pipe reduction at the control valve. This rapid drop of brake pipe pressure operates the control valve quickly and delivers a higher brake cylinder pressure than with a service brake application.

(d) A graduated or direct release feature is available on the 26-C control valve. A cap on the control valve may be positioned for Graduated Release, GRA (as read from the outer edge of the valve body), or Direct Release, DIR, by removing two nuts and turning the cap to the desired position, same as with the D-22 equipment.

ANTI-WHEEL SLIDE DEVICES

231.–(a) **Decelostat**: The decelostat equipment provides a mechanical-pneumatic means of improving braking on passenger cars by protecting against wheel sliding during brake applications.

It functions automatically when a wheel slip occurs to rapidly decrease brake cylinder pressure to a low value, permitting the wheel speed to return to train speed. After an interval sufficient to enable the wheel speed to have regained train speed, brake cylinder pressure is quickly restored.

Any recurrence of wheel slipping causes the decelostat equipment to repeat this function.

(b) **Rolokron**: The Rolokron equipment performs the same function as the Decelostat except that electrical means are employed to monitor wheel sliding and adjust brake cylinder pressure.

PNEUMATIC SLACK ADJUSTERS

232.–This type of slack adjuster is used on passenger equipment, both cars and engines, to maintain proper piston travel. The pneumatic slack adjuster is operated by the admission and release of brake cylinder air through a port located in the brake cylinder. This port is so located that the brake cylinder packing cup uncovers it when a predetermined piston travel is exceeded, thereby admitting air to the slack adjuster and causing it to take-up slack.

When applying new brake shoes, the ratchet nut should be turned until sufficient slack is available. After the brake shoes have been applied, apply the brake with a full service brake application and inspect to see that brake rigging does not foul. Then release the brake and note the piston travel, adjusting if necessary.